kaschütz
Modernes Heizen mit Tradition

Installation instructions for Firetherm heating inserts





TABLE OF CONTENTS

1. Standards and technical data	Page	3
1.1. Standards	Page	3
1.2. Technical data	Page	4
1.3. Dimensions	Page	4
2. Installation	Page	6
2.1. Planning	Page	6
2.2. Installation preparations	Page	7
2.3. Assembly	Page	7
2.3.1. Fitting the levelling feet	Page	7
2.3.2. Fitting the external air adapter	Page	8
2.3.3. Fitting the outlet spigot	Page	8
2.4. Installation	Page	9
2.4.1. Heating insert with metal after-heating boxes	Page	9
2.4.2. Heating insert with brick-built extension flues	Page	9
2.5. Fire safety regulations	Page	10
2.5.1. Measures for combustible floor coverings	Page	10
2.5.2. Clearances from combustible building components	Page	10
2.5. Installation of fireclay bricks in the heating insert	Page	11
2.6. Sealing	Page	11
2.7. Accessories	Page	11
2.7.1. Combustion control – 'Euromatic'	Page	11
2.7.2. Heat storage attachment – "PILO"	Page	11
2.8. Fitting the firebox door	Page	12
3. Initial commissioning	Page	12
4. Repair instructions	Page	13
4.1. Replacing the fireclay lining	Page	13
4.2. Replacing glass panes or sealing cords	Page	13
5. Concluding remarks	Page	13
6. Spare parts	Page	14
6.1. Viewing panes	Page	14
6.2. Fireclay diagrams	Page	14

1. Standards and technical data

1.1. Standards

The heating insert has been tested in accordance with the internationally recognised standard EN 16510-2-

National and local regulations must be complied with for the specific installation site.

Internationally applicable:

- ✓ Ecodesign Directive – EU Regulation 1185/2015
- ✓ DIN EN 13229: Requirements and tests for heating inserts
- ✓ EN 16510 Part 2-2: Domestic fireplaces for solid fuels

Austria:

- ✓ 15a B-VG: 15a Agreement (since 1 January 2015)
- ✓ Eco-label Directive 37 – Wood-burning heating systems

Germany:

- ✓ 1.BImSchV: First Ordinance Implementing the Federal Immission Control Act

Switzerland:

- ✓ VKF Fire Protection Application No. 21842: Information on applicability in accordance with Swiss fire safety regulations

These installation and assembly instructions are not intended to, nor can they serve as, a detailed plan for the construction of a tiled stove system. The tiled stove must be designed
and installed by a master stove fitter or heating engineer. These instructions can only provide guidance and serve as a .

When selecting the size of the appropriate heating insert, please consult your master stove fitter, who will carry out the precise heat requirement calculation for you in accordance with EN 12831.

Air circulation grilles must have the following minimum cross-sectional area and should ideally be adjustable:

FIRETHERM	6+Tunnel	10+Tunnel	12+Tunnel
Air cross-sectional area [cm²]	3160	4700	6400

Furthermore, when installing the recirculation grilles, the standard
Please observe DIN 18896 and the references in EN 13229!

The relevant building regulations and fire safety regulations and guidelines for the construction of tiled stoves must be observed. In all cases, the local chimney sweep must be consulted prior to installation. The chimney sweep will also inspect the chimney intended for this purpose.

Please note (unless regional regulations stipulate different distances):
If the Firetherm heating insert is used without a brickwork surround (tiled stove casing), a minimum distance of 80 cm from combustible materials must be maintained all round the heating insert!
If the heating insert is encased in 4 cm thick fireclay panels, a minimum distance (within a radius) of 80 cm must be maintained between the heating door and combustible materials, and a minimum distance of 15 cm between the tiled stove casing and combustible materials. If the tiled stove casing is constructed with different wall thicknesses or different materials, the distance between the casing and combustible materials must be adjusted accordingly.
Similarly, a minimum distance of 15 cm must be maintained between the convection air vents and combustible materials.

1.2. Technical data

FIRETHERM	6	6 Tunnel	10	10 Tunnel	12	12 Tunnel
Nominal heat output (kW)	6,6	5,3	12,5	9,2	19	15,5
Exhaust gas mass flow (g/sec)	43,7	57,8	50,5	43,7	45,8	42,8
Average flue gas temperature (°C)	526	347	585	584	555	633
Average combustion temperature (°C)	170*	139*	148**	161**	122**	137**
Recom. min. delivery pressure (Pa)	14	14	14	14	14	14
Efficiency (%)	>80	>80	>80	>80	>80	>80
Weight (kg)	190	190	205	205	360	360

*) Use of 1 reheating box
**) Use of 2 reheating boxes

The distance between the heating insert and the outer casing (building material) must meet the following minimum clearances:

FIRETHERM	6	10	12
Distance in cm	13	15	15

1.3. Dimensions of the heating insert

Firetherm 6

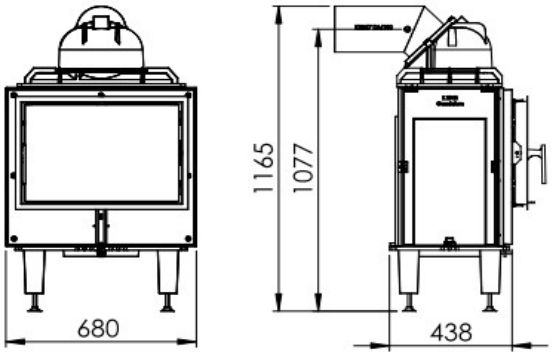

Firetherm 6 Tunnel

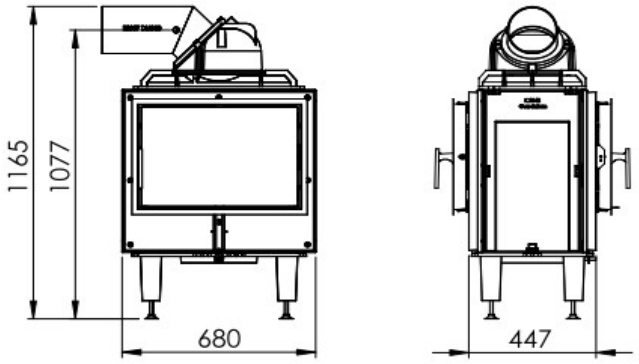

Firetherm 10

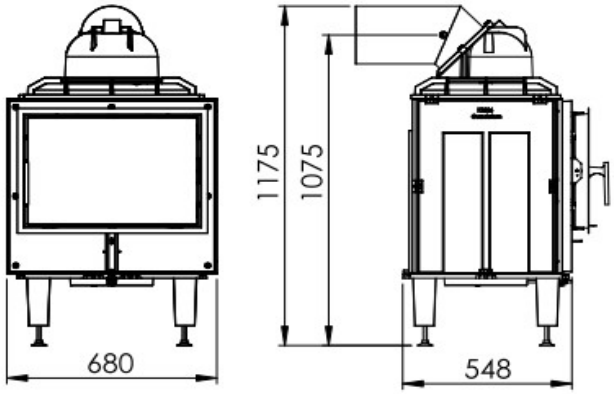

Firetherm 10 Tunnel

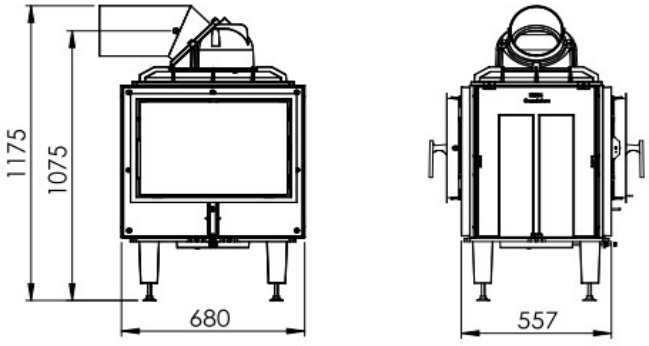

Firetherm 12

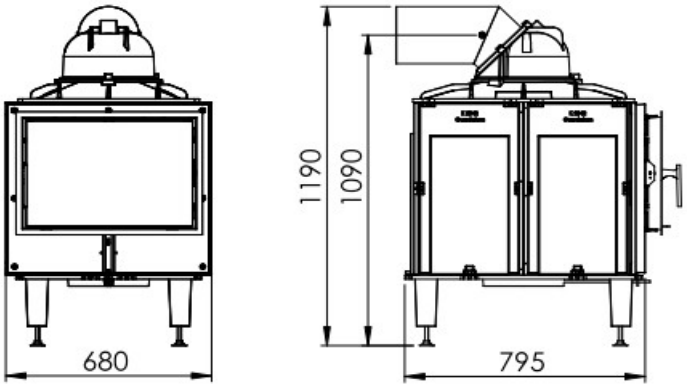

Firetherm 12 Tunnel

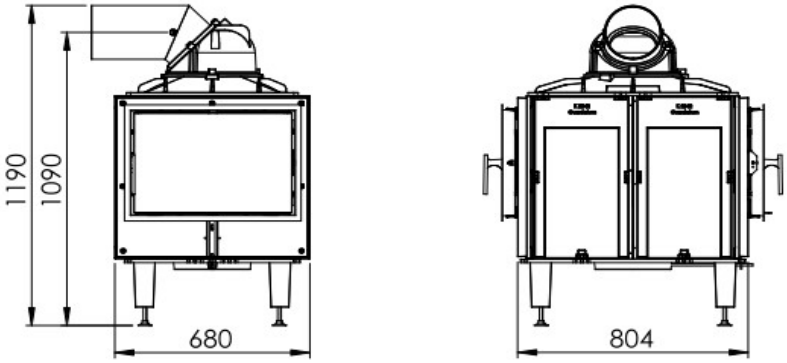

2. Installation

2.1. Planning

When planning, please take note of the technical specifications of the heating inserts and, when planning the tiled stove casing, ensure that access openings are positioned so that the
desired areas can be easily accessed (heating insert, cleaning openings, pipes, T-pieces, etc.)
If your heating insert is fitted with a combustion control system, please also ensure
to provide service access points for the temperature sensor and the motor. Furthermore,
the door contact switch should be easy to replace.
Load-bearing capacity of the substrate: This must be able to support the weight of the heating insert and the casing on the underlying exposed concrete floor.

If the combustion air for the heating insert is drawn from the room in which it is installed, measures may need to be taken. The installation of heating inserts in living spaces with controlled ventilation is possible if a so-called 'negative pressure monitor' is installed.

Simultaneous operation with other fireplaces: In principle, it is possible to operate the respective heating inserts to operate simultaneously with other fireplaces; however, the other fireplaces must only be operated in closed. It is also essential that the standards and guidelines must be strictly adhered to, and the flue must be designed for this purpose.

Multiple use of the flue: Our heating inserts are generally suitable for multiple use of the flue in closed-flue operation. However, care must be taken to ensure that the national and regional standards and guidelines are observed.

2.2. Installation preparations

Remove the packaging material from the heating insert, check that it is complete and check the delivery for any transport damage.
Remove the dome from the heating insert by loosening the M8 external hexagon bolts and the corresponding nuts (13 mm open-ended or ring spanner) to allow the fireclay bricks to be removed from the heating insert. This reduction in weight makes the heating insert very easy to transport.

Now move the heating insert to the desired room and position.

2.3. Assembly

2.3.1. Fitting the levelling feet

Tool: 1x Open-ended/ring spanner: 13
1x Open-ended/ring spanner: 17

Screw the supplied feet onto the underside of the heating element at the designated positions.

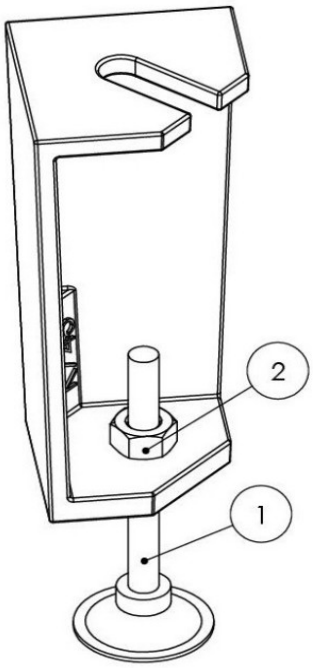

Then place the heater insert on the intended position. Using the adjustable feet, the height can be further adjusted and the heater can be levelled correctly using a spirit level to ensure it is in the correct and level position.
IMPORTANT: After adjustment the adjustable foot with the lock nut!

1 height-adjustable foot
2 Lock nut

2.3.2. Fitting the external air adapter

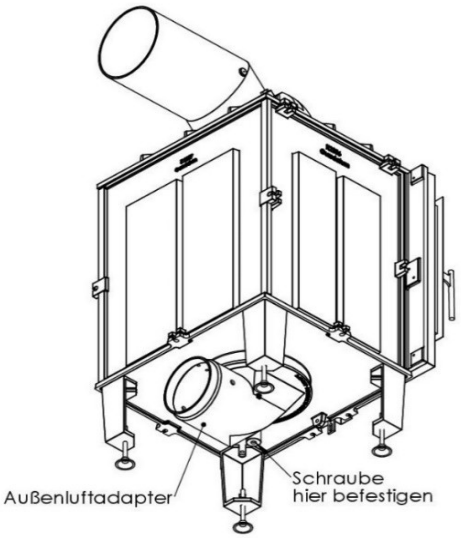

Tool: 1x 13 mm open-ended/ring spanner

If you are supplying your tiled stove with combustion air from outside , please use the external air adapter provided for this purpose adapter. This is available in horizontal and vertical versions.

Fitting: On the underside of the heating insert, there is an base plate (in the centre of the ring).
Secure the adapter using the M8 screw provided.
A gasket should be fitted to the outside air adapter to a tight seal is guaranteed.

2.3.3. Fitting the outlet spigot

The outlet you have ordered is included with the heater insert on the pallet.
You can simply fit this to the dome and secure it with the screws supplied.

All outlet fittings (hood/flue pipe connection, horizontal flat dome, etc.) can be rotated through 360°.

2.4. Installation

Now place the heating insert in the designated position.
The heating insert can be installed in two ways:

2.4.1. Firebox with metal after-heating surfaces (after-heating box)

In this case, the heating insert is placed on a standard support base or, using the feet supplied, placed on the floor using the feet supplied. In any case, it is essential to ensure an adequate supply of combustion air, as otherwise overheating may occur.
The combustion chamber itself, and in particular the base of the combustion chamber, must be made of non-combustible materials. Ensure that no combustible building materials are laid beneath the non-combustible floor covering, or that these are adequately protected.
Furthermore, all connections between the heating insert, the reheating chamber and the flue must be completely airtight, so that neither false air can enter nor flue gases escape. All openings in the flue openings – such as chimney doors – must be closed. Care must be taken to ensure that openings are provided in the plasterwork are provided so that the reheating boxes and the connecting piece can be cleaned.

Please note:
If a fireplace installed in a living area draws its combustion air from the room in which it is installed , the system operator must ensure an adequate supply of fresh air. If necessary, a separate combustion air supply from outside must be installed! Please therefore also follow the instructions provided by your stove fitter. In accordance with the TR-Warmluft guidelines, the design of the heating chamber must be carried out. The exact minimum distances from the heating chamber wall to the heating chamber wall must be observed. However, any insulation used must not have a surface made of a heat-reflective material.
A partition plate should be fitted between the heating insert and the after-heating unit, thereby increasing the thermal efficiency. The secondary heating element should be easily accessible . If a hypocaust heating system is installed, adequate circulation within the closed air system.

2.4.2. Heating insert with brick-built secondary flues (combination stove)

The heating insert is installed as described above. The connection from the heating insert to the brick flue system of the tiled stove is achieved by means of a cast-iron spout fitted onto the heating insert. This must be fitted in such a way that no cracks occur at the transition to the ceramic flue due to thermal expansion. The increased flow resistance (of the ceramic flue compared the tested reheating chamber) must be taken into account when dimensioning the flue.

Please note:
Ensure that the substrate is level and free from any dirt. If the substrate is not clean and level, there is a risk that the heating insert may wobble, which may cause damage, particularly to the plaster or tiled cladding, during continued operation.

2.5. Fire safety regulations

Bernhard Kaschütz GmbH does not specify any regulations. Reference is made solely to ÖNORM B8311 .
In other countries, the clearances from combustible building components may differ.

2.5.1. Measures for combustible floor coverings

If there is a combustible floor covering in front of the tiled stove, a base plate must must be installed:

The underlay must be made of a non-non-combustible material and extend 10 cm to the right and left beyond the outer edge of the heating door.

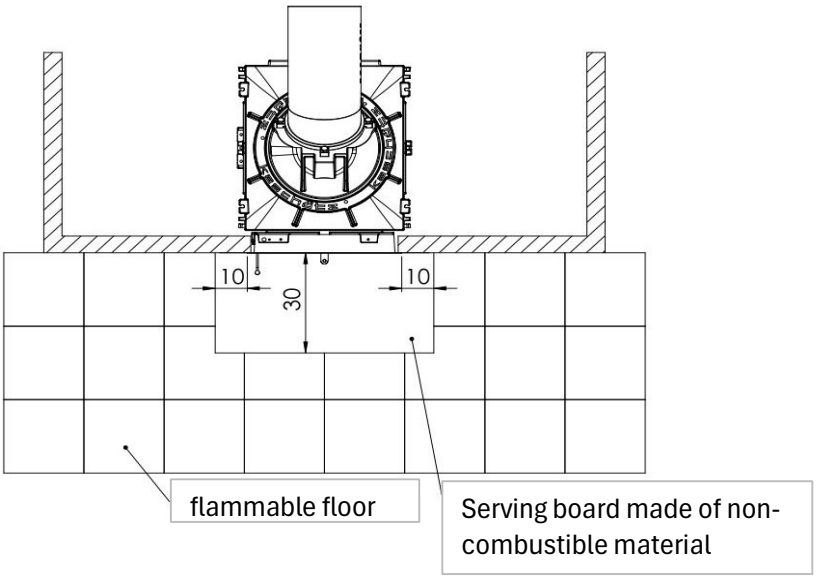

2.5.2. Clearances from combustible building

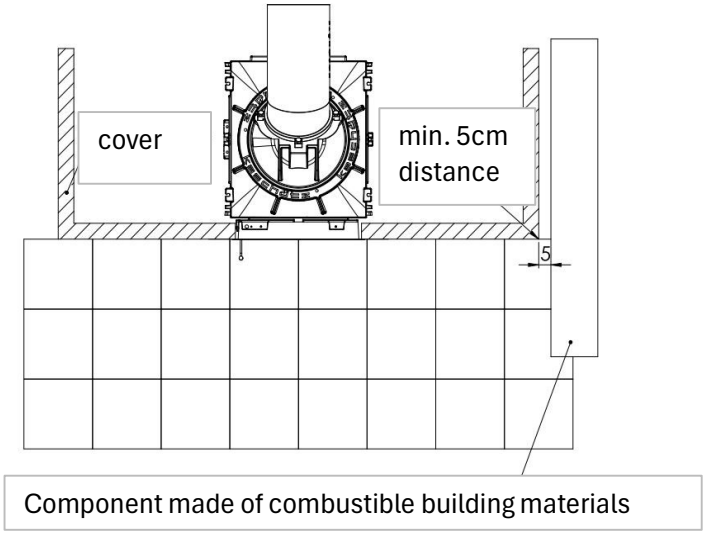

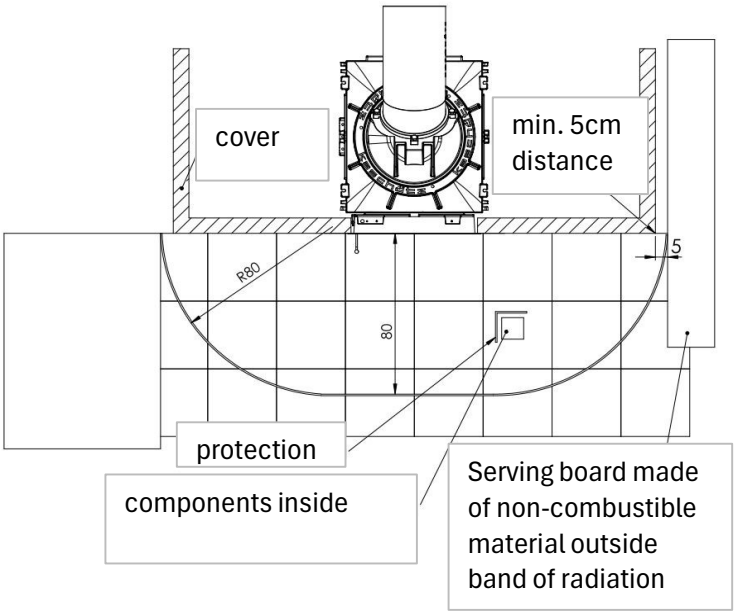

The distance between combustible components and the tiled stove casing must be at least 5 cm.

If there are any combustible furnishings or components within a radius of 80 cm (measured from the heating door), these must either be removed or shielded.

2.6. Fitting the fireclay bricks into the heating insert

Refit the heating insert with the fireclay bricks supplied.
Ensure that the combustion air openings face downwards so that no ash can enter the air duct between the fireclay and the cast-iron side wall:

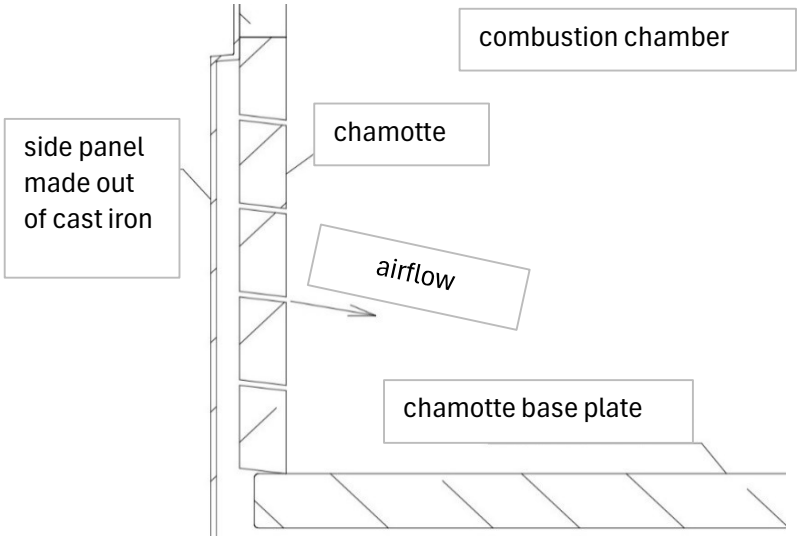

2.7. Sealing

Tool: 1 cartridge press

Seal the groove in the dome using the iron putty (cartridge) supplied.

Now refit the dome onto the heating insert.

Tip: Use enough iron putty so that, when slightly oozes out of the joint when fitted. This ensures the perfectly filled with iron putty. The excess putty can be removed with a damp brush and smoothed out .

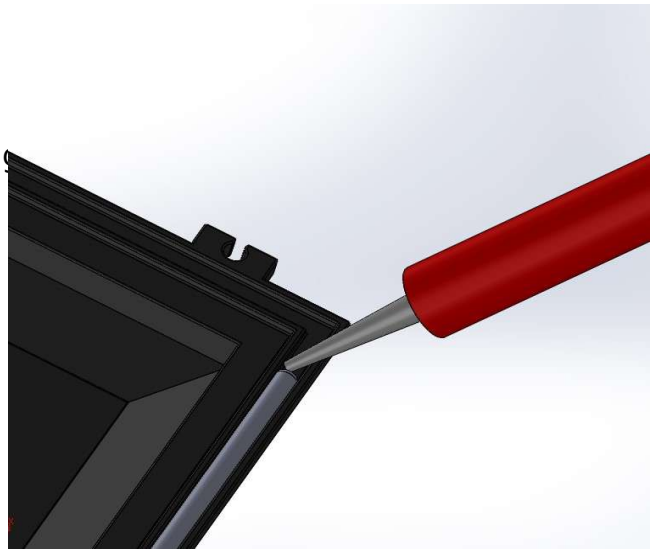

Now screw the dome in place using the supplied external hexagon screws, washers and M8 nuts . Tighten them hand-tight.

Place the supplied sealing cord (ø12mm) into the groove in the dome and place the cover onto the dome (if fitted). Ensure that the cover is centred. Secure the cover using the supplied retaining brackets and the M10 external hexagon bolts, and tighten these by hand as well.

GO firebox: Fireplace inserts with a fireclay surround frame, the GO fireboxes, do no cast-iron dome. Seal the groove at the bottom of the support frame as described above

2.8. Accessories

2.8.1. Combustion control – Euromatic

Please follow the manufacturer's installation instructions!

2.8.2. Storage unit attachment – PILO

Follow the installation instructions provided!

2.8. Fitting the firebox door

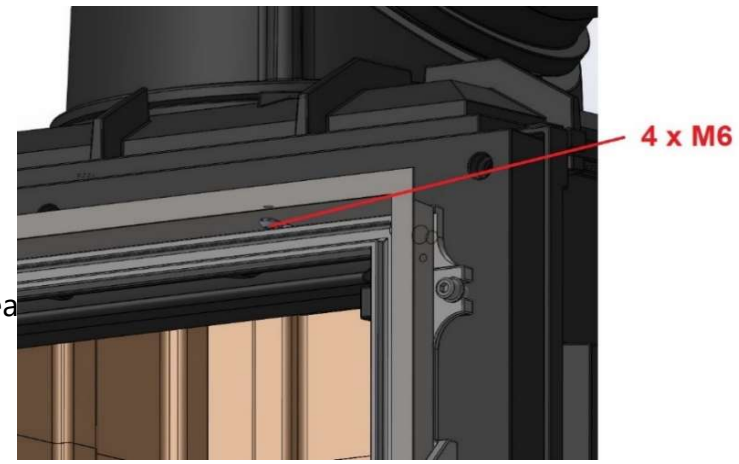

Tool: 6 mm Allen key
3 mm Allen key

To prevent damage during transport, the heating is pre-fitted to the heater insert . To allow for greater flexibility when installing the hea , it is advisable to remove the door and reattach it to the heating insert to the stove insert once the work is complete.

First, remove the 4 hexagon socket screws (M6) to remove the frame. Then remove the 8x Allen screws (M8) and remove the door!

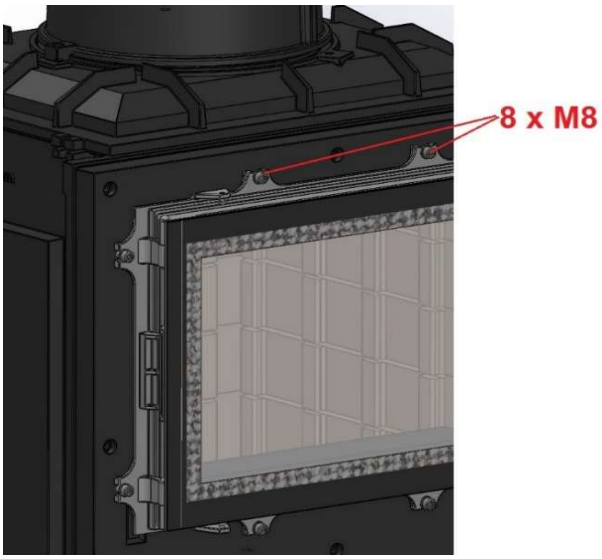

Please note:
The heater door is heavy; do not drop it. If necessary, use two people to handle it. → Risk of tipping!

Reassembly is carried out in reverse order!

The door panel can be easily unhinged by gently pushing it upwards.
The bolt will then come out of its mounting and you can now unhinge the door leaf.

3. Initial commissioning

The initial commissioning of the tiled stove system should be carried out by a qualified stove fitter in accord (supplied with the heating insert). During this process, measurements should be taken at the easily accessib measuring and testing points in accordance with the regulations, if these are specified.
Finally, the end user confirms in an acceptance and handover report that they have accepted of the operating instructions and the training provided by the master stove fitter. For the warranty and product liability, we recommend that the master stove fitter has the handover of the tiled stove system and draws the customer's attention to all important details of the tiled stove, or when heating.

4. Repair instructions

4.1. Replacing the fireclay lining

Tool: 1x Allen key 6

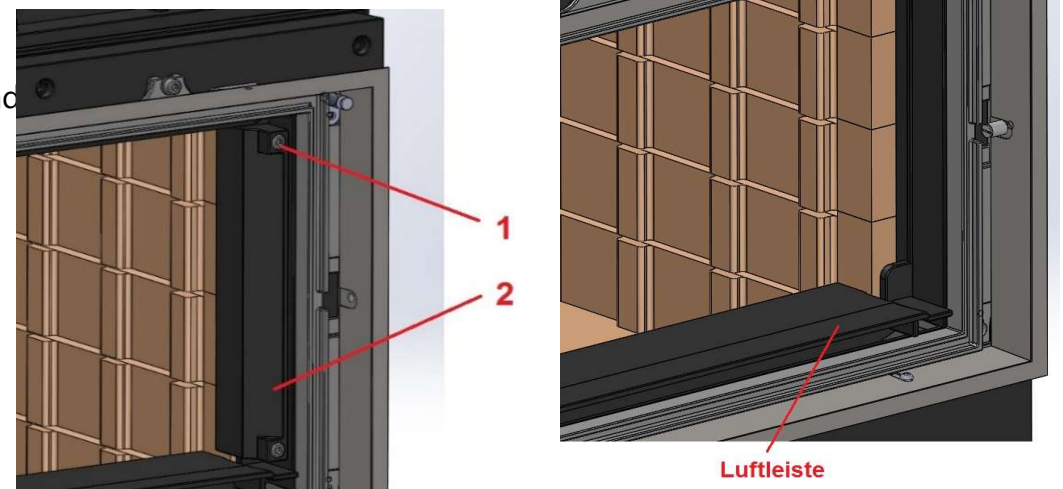

Screws (1) on the firebrick strips on the left and right, and remove the strip (2).
Then remove the air strip.

The brick can then simply be taken out and pulled out through the filling door
.
Once the first brick has been removed, all the others can also be removed.
Reinstallation is carried out in reverse order!

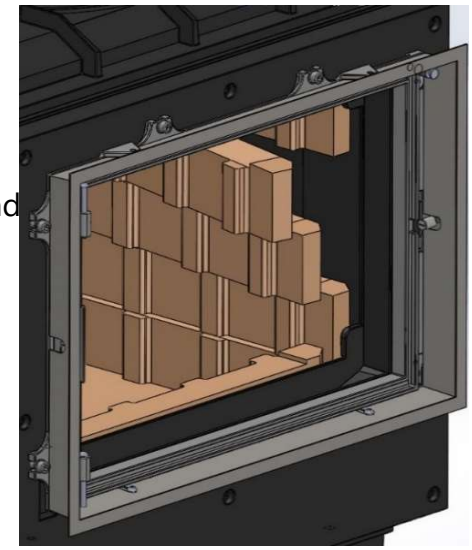

On the Firetherm 12, there are two cast-steel fireclay strips on the left and right. Remove
the fireclay bricks in the rows near the heating door.
Then fold the strip down so that its upper end towards you. You can now remove the row of fireclay bricks
. (Caution: This base plate is very heavy!)

Please note:
The fireclay bricks must only be placed in the the heating insert. These must not be set with mortar!

4.2. Replacing glass panes or sealing cords

Please contact Bernhard Kaschütz GmbH before carrying out any repairs so that the procedure for replacing the glass can be clarified.
Glass panels secured with screws (Elegance, Aurea inner glass) can be replaced on site.
Glass panels that are bonded in place (Aurea outer glass) must be sent to Bernhard Kaschütz GmbH for repair.
If possible, remove the door leaf from its hinges and place it on a flat surface.
If necessary, also check the door seals.

5. Concluding remarks

Version of these instructic Mittwoch, 12. August 2026
Bernhard Kaschütz GmbH reserves the right to make changes at any time.

6. Spare parts

#

#

6.1. Viewing panes

Designation	Outer pane		Inner pane	
	Designation	Dimensions (mm)	Designation	Dimensions (mm)
Aurea 60	ROBAX 41	370x550x4	ROBAX 40	492 x 310 x 4

6.2. Fireclay diagrams

Firetherm 6

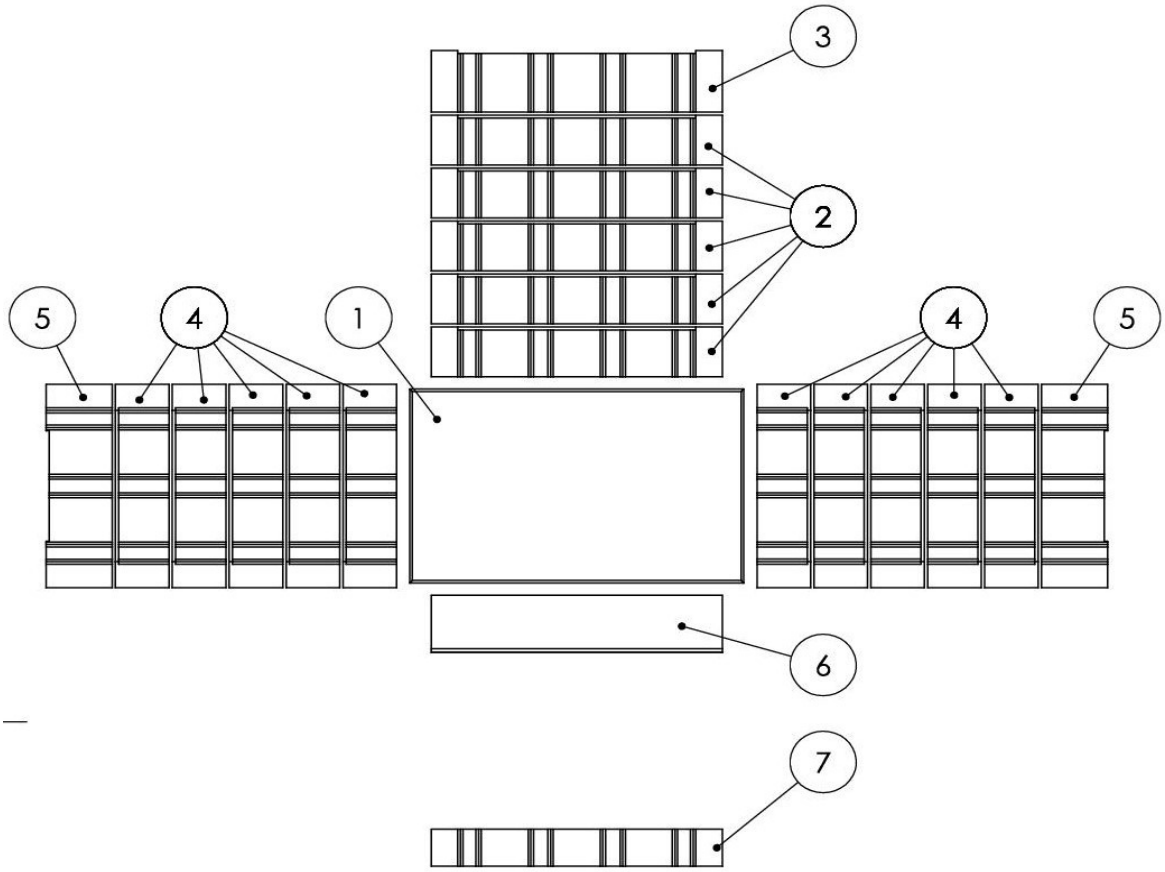

POS No.	COMPONENT	QUANTITY
1	Base plate	1
2	Back panel	5
3	Top rear wall block	1
4	Side wall block	10
5	Top side panel	2
6	Front block, bottom	1
7	Top front panel	1

Firetherm 6 Tunnel

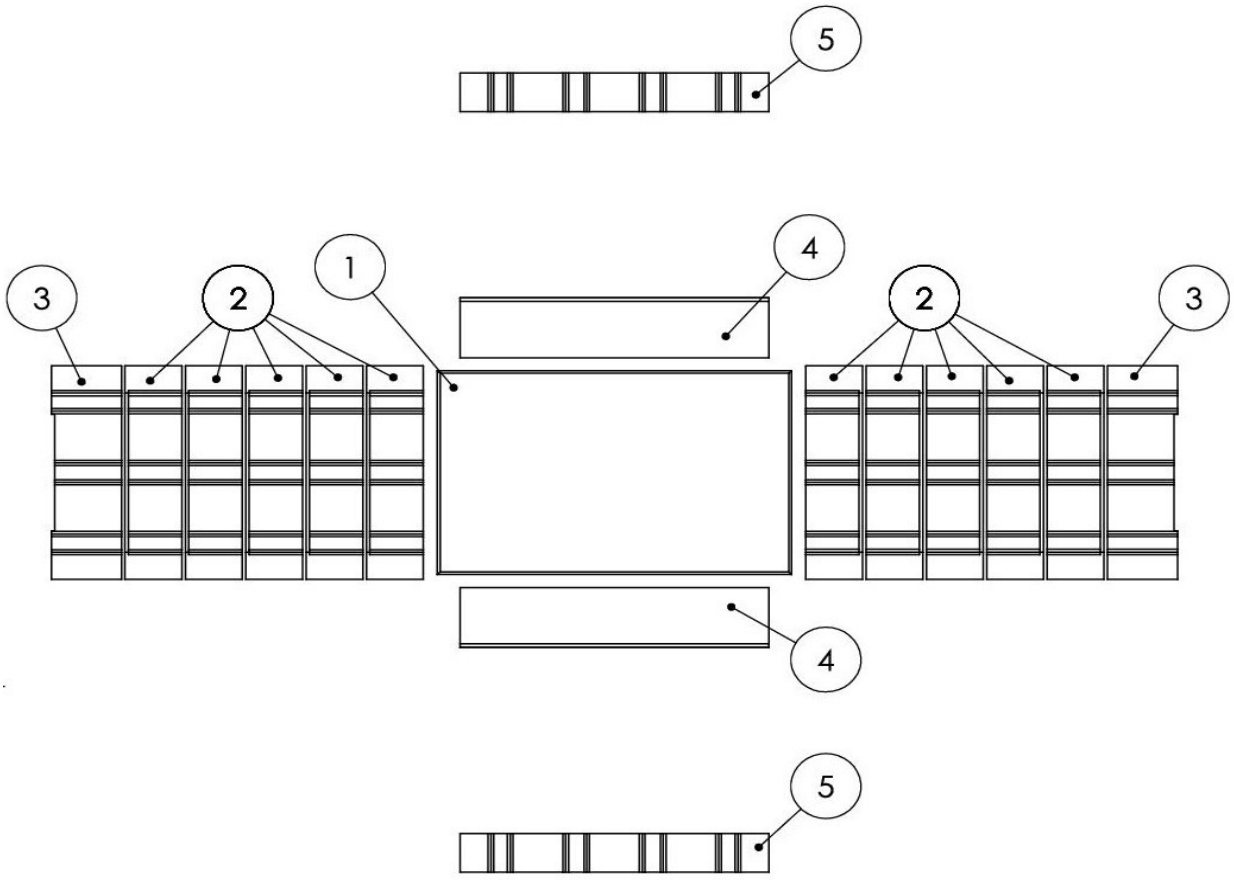

POS No.	COMPONENT	QUANTITY
1	Base plate	1
2	Side wall block	5
3	Top side panel	1
4	Front wall stone, bottom (rear + front)	10
5	Front wall block, top (rear + front)	2

Firetherm 10

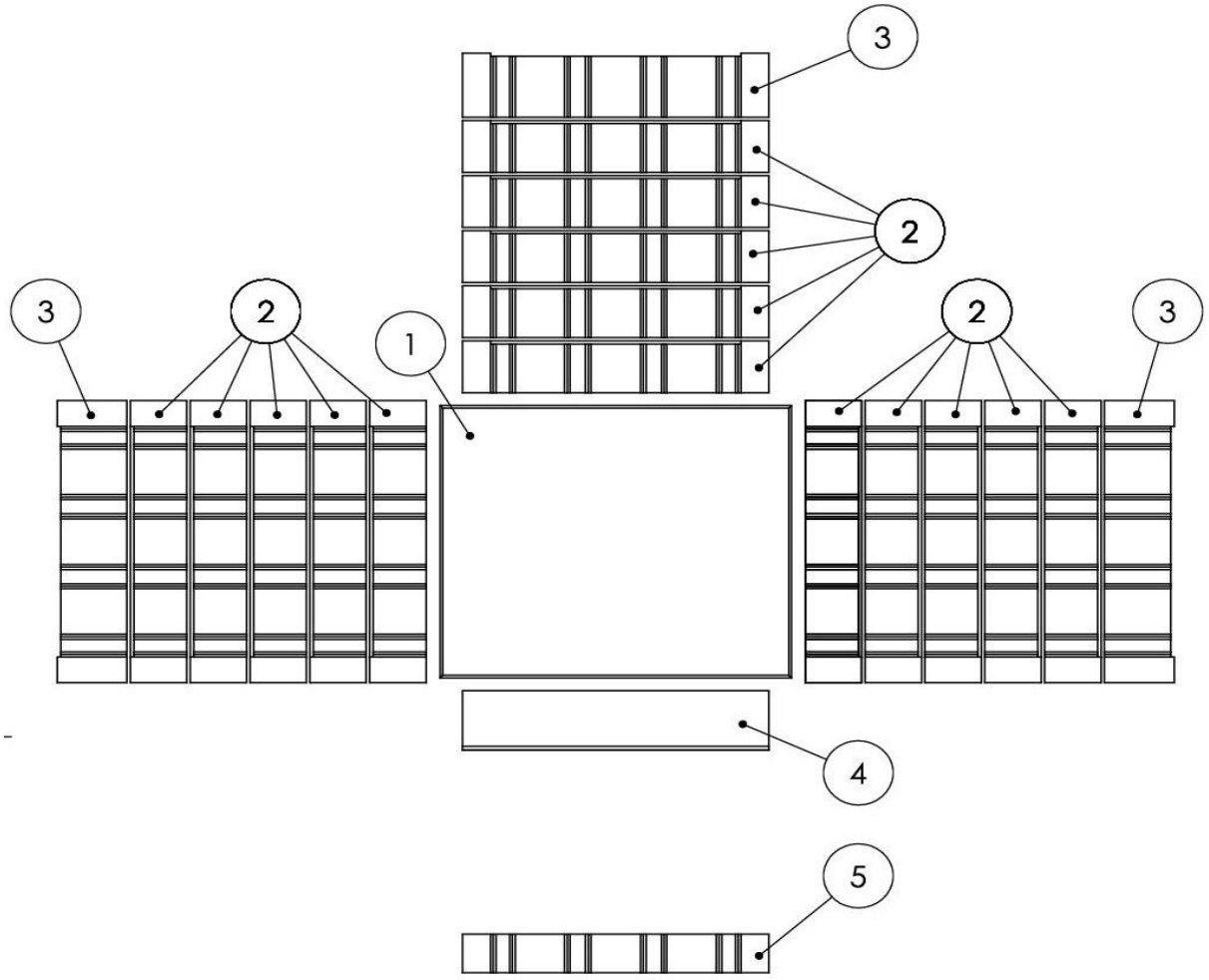

POS No.	COMPONENT	QUANTITY
1	Base plate	1
2	Rear and side wall blocks	15
3	Top rear and side wall blocks	3
4	Front wall stone, bottom	1
5	Front wall stone, top	2

Firetherm 10 Tunnel

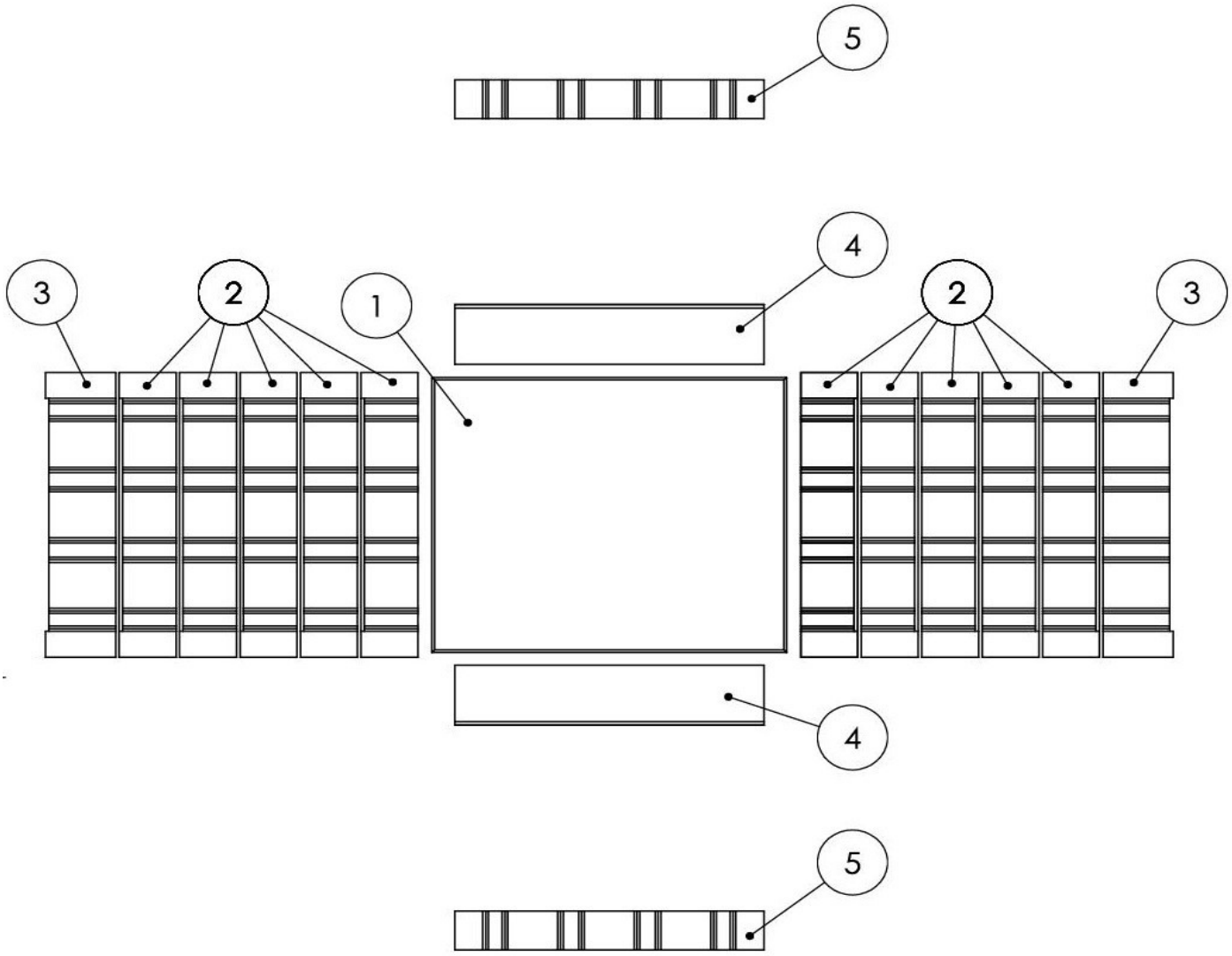

POS No.	COMPONENT	QUANTITY
1	Base plate	1
2	Side wall block	10
3	Top side panel	2
4	Front wall block, bottom (front + back)	2
5	Front wall block, top (front + rear)	2

Firetherm 12

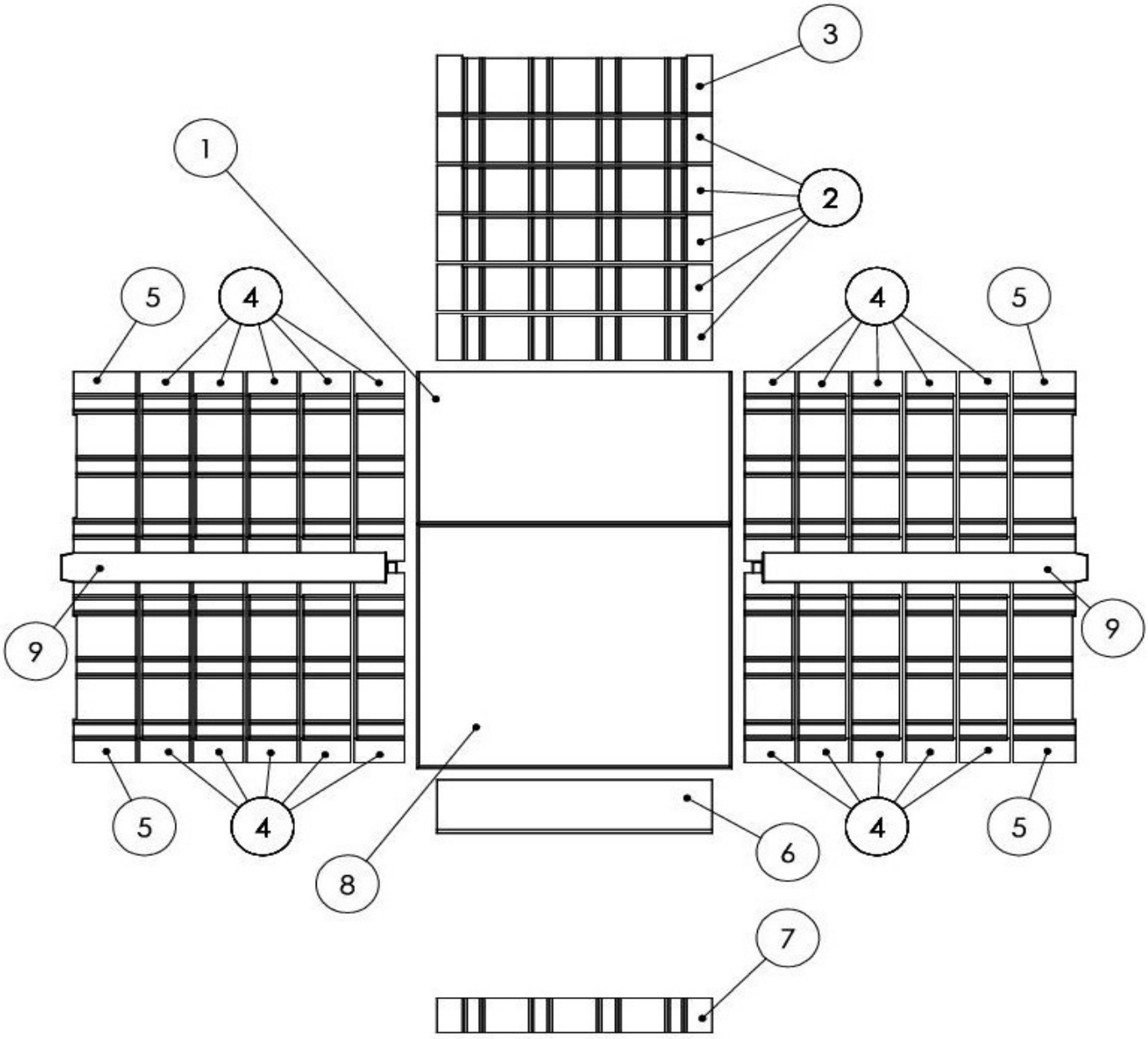

POS No.	COMPONENT	QUANTITY
1	Small base plate	1
2	Back panel	5
3	Top rear wall block	1
4	Side wall block	20
5	Top side panel	4
6	Front wall block, bottom	1
7	Front wall stone, top	1
8	Large base plate	1
9	Fireclay strip (left and right)	2

Firetherm 12 Tunnel

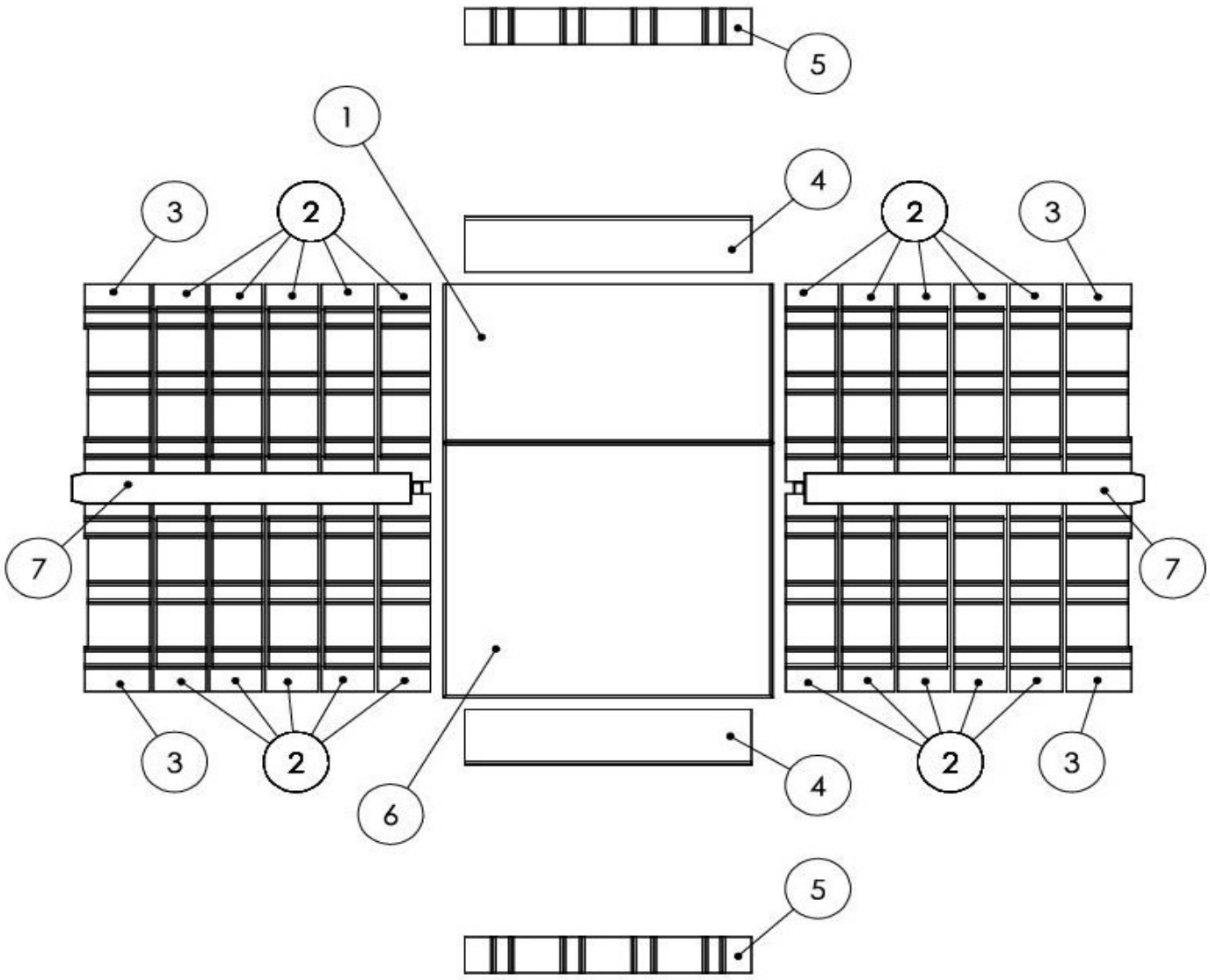

POS No.	COMPONENT	QUANTITY
1	Small base plate	1
2	Side wall block	5
3	Top side panel	1
4	Front wall block, bottom (front + back)	20
5	Front wall block, top (front + rear)	4
6	Large base plate	1
7	Fireclay strip (left and right)	1