kaschütz
Modernes Heizen mit Tradition

Installation instructions for Eurotherm heating elements





TABLE OF CONTENTS

1. Standards and technical data	Page	3
1.1. Standards	Page	3
1.2. Technical data	Page	4
1.3. Dimensions	Page	5
2. Installation	Page	9
2.1. Planning	Page	9
2.2. Installation preparations	Page	10
2.3. Assembly	Page	10
2.3.1. Fitting the support feet	Page	10
2.3.2. Fitting the external air adapter	Page	11
2.3.3. Fitting the outlet spigot	Page	11
2.3.4. Fitting and removing the heating door	Page	11
2.4. Installation	Page	12
2.4.1. Firebox with metal after-heating boxes	Page	12
2.4.2. Fire insert with brick-built extension flues	Page	12
2.5. Fire safety regulations	Page	13
2.5.1. Measures for combustible floor coverings	Page	13
2.5.2. Clearances from combustible building components	Page	13
2.6. Installation of fireclay bricks	Page	14
2.7. Sealing	Page	14
2.8. Accessories	Page	14
2.8.1. Combustion control – 'Euromatic'	Page	14
2.8.2. Heat storage attachment – "PILO"	Page	14
3. Repair instructions	Page	15
3.1. Replacing the fireclay lining – "E Series"	Page	15
3.2. Replacing the fireclay lining – "D/FP Series"	Page	15
3.3. Replacing glass panes or sealing cords	Page	16
4. Initial commissioning	Page	16
5. Concluding Remarks	Page	16
6. Spare parts	Page	17
6.1. Viewing panes	Page	17
6.2. Fireclay diagrams	Page	17

1. Standards and technical data

1.1. Standards

The heating insert has been tested in accordance with the internationally recognised standard EN 16510-2-2.

National and local regulations must be complied with for the specific installation site.

Internationally applicable:

- ✓ Ecodesign Directive – EU Regulation 1185/2015
- ✓ DIN EN 13229: Requirements and tests for heating inserts
- ✓ EN 16510 Part 2-2: Domestic fireplaces for solid fuels

Austria:

- ✓ 15a B-VG: 15a Agreement (since 1 January 2015)
- ✓ Eco-label Directive 37 – Wood-burning heating systems

Germany:

- ✓ 1.BImSchV: First Ordinance Implementing the Federal Immission Control Act

Switzerland:

- ✓ VKF Fire Protection Application No. 21842: Information on applicability in accordance with Swiss fire safety regulations

These installation and assembly instructions are not intended to, nor can they serve as, a detailed plan for the construction of a tiled stove system. The tiled stove must be designed and installed by a master stove fitter or heating engineer. These instructions can only provide guidance and serve as a.

When selecting the size of the appropriate heating insert, please consult your master stove fitter, who will carry out the precise heat requirement calculation for you in accordance with EN 12831.

Air circulation grilles must have the following minimum cross-sectional area and should ideally be adjustable:

EUROTHERM	4E	6E*	8E	8D 500	10D	10E**	10E Tun.***	12E	12E Tun.
Air cross-section in cm^2	1400	2000	2200	2200	2200	2200	2100	3650	2500

Furthermore, when installing the recirculation grilles, the standard DIN 18896 and the references in EN 13229 must be observed!

* 6E incl. 6E GET/6E tunnel/6E GET tunnel

** 10E and 10E GET

*** 10E Tunnel and 10E GET Tunnel

The relevant building regulations and fire safety regulations and guidelines for the construction of tiled stoves must be observed. In all cases, the local chimney sweep must be consulted prior to installation. The chimney sweep will also inspect the chimney intended for this purpose.

Please note (unless regional regulations stipulate different distances):
If the heating insert is used without a surrounding brickwork casing (tiled stove casing), a minimum distance of 80 cm from combustible materials must be maintained all round the heating insert!
If the heating insert is encased in 4 cm thick fireclay panels, a minimum distance (within a radius) of 80 cm must be maintained between the heating door and combustible materials, and a minimum distance of 15 cm between the tiled stove casing and combustible materials. If the tiled stove casing is constructed with different wall thicknesses or other materials, the distance between the casing and combustible materials must be adjusted accordingly.
Similarly, a minimum distance of 15 cm must be maintained between the convection air vents and combustible materials.

1.2. Technical data

EUROTHERM	4E	6E	6E GET	8E	8D 500	10D	10E	10E GET	12E
Rated heat output (kW)	2 - 4,2	3 -6,5	3 - 6,5	4,5 - 9,5	5,5 - 11	6,3 - 12,5	4,5 - 13	4,5 - 11	7 - 18,5
Exhaust gas mass flow (g/sec)	37,4	41,6	40,5	33,1	46,5	37,4	56,3	49,7	45,7
Average flue gas temperature (°C)	448	372	631	494	528	619	573	605	572
Average combustion temperatu	163*	157*	179*	157*	139**	122**	168**	224**	191**
Rec. minimum delivery pres.(Pa)	14	14	14	14	14	14	14	14	14
Efficiency (%)	>80	>80	>80	>80	>80	>80	>80	>80	>80
Weight (kg)	160	180	190	180	230	215	195	205	285

EUROTHERM TUNNEL	4E	6E	6E GET	10E	10E GET	12E
Rated heat output (kW)	2 - 4,2	3,2 - 7	3,1 - 6,8	4,7 - 11	5,3 - 10,5	7,5 - 19,5
Exhaust gas mass flow (g/sec)	37,4	36,7	38,2	43,6	46	49,2
Average flue gas temperature (°C)	448	469	517	531	513	540
Average combustion temperatu	163*	180*	180*	214**	207**	112**
Rec. minimum delivery pres. (Pa)	14	14	14	14	14	14
Efficiency (%)	>80	>80	>80	>80	>80	>80
Weight (kg)	165	185	195	200	210	290

*) Use of 1 reheating box
**) Use of 2 reheating boxes

The distance between the heating unit and the outer casing must meet the following minimum clearances:

EUROTHERM	4	6	8	10	12
Distance in cm	10	13	13	13	15

1.3. Dimensions of the heating insert

Eurotherm 4E/EV

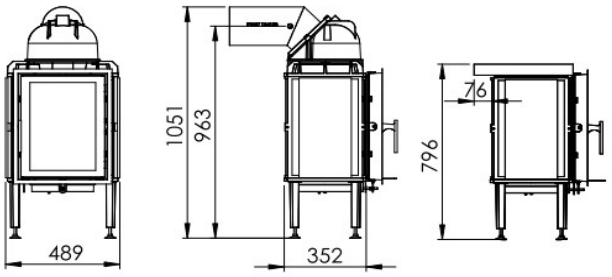

Eurotherm 4E/EV Tunnel

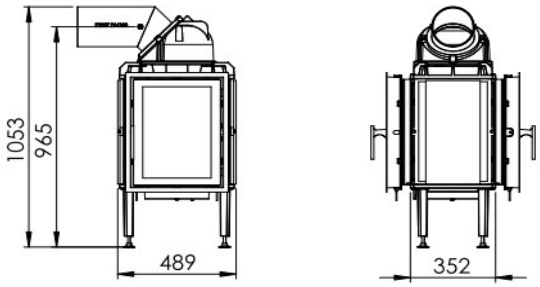

Eurotherm 6E/EV

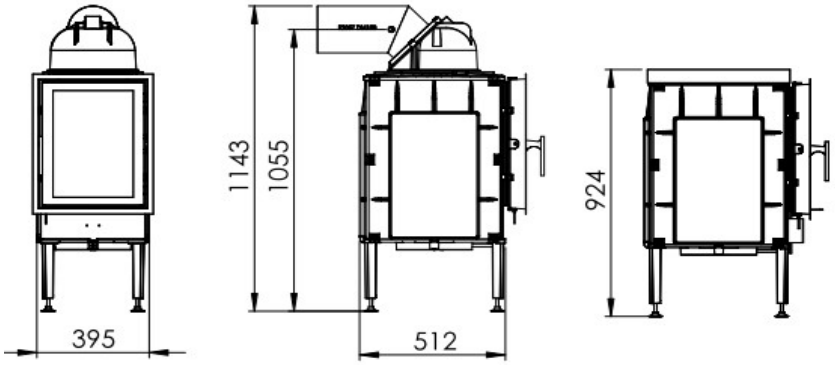

Eurotherm 6E/EV Tunnel

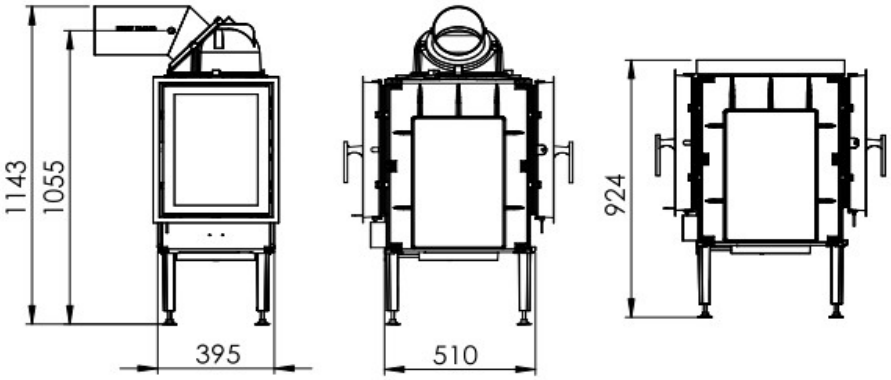

Eurotherm 6E/EV GET

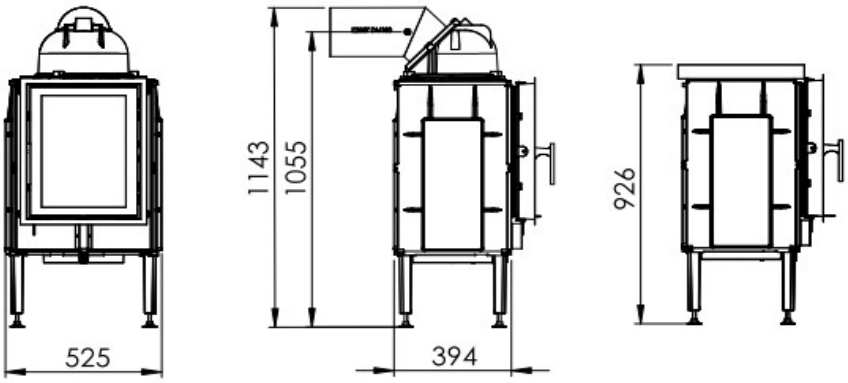

Eurotherm 6E/EV GET Tunnel

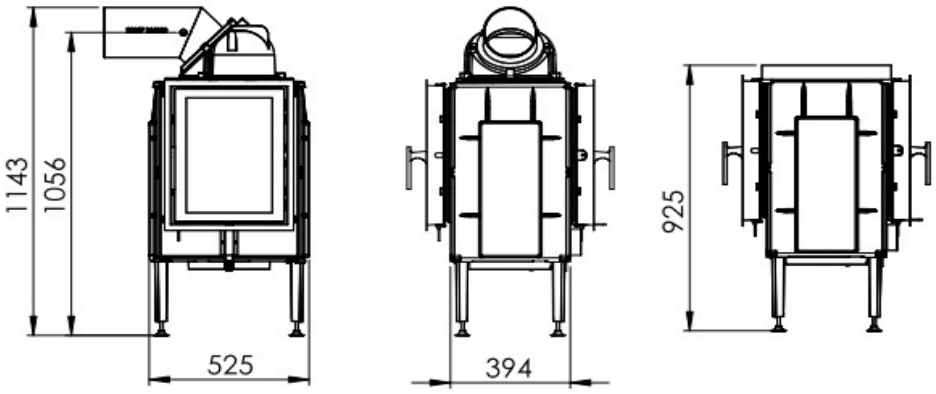

Eurotherm 6E/FP

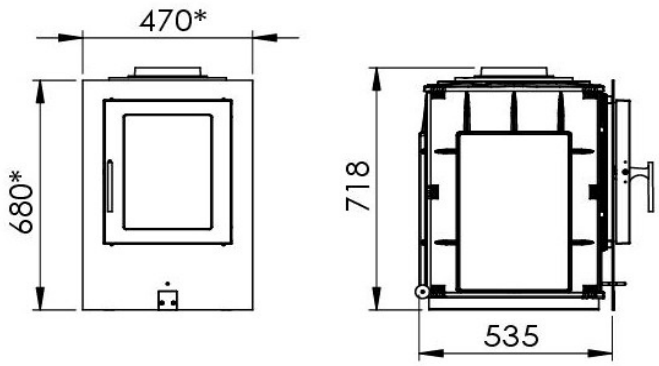

*) Other front panel sizes available

Eurotherm 8E/EV

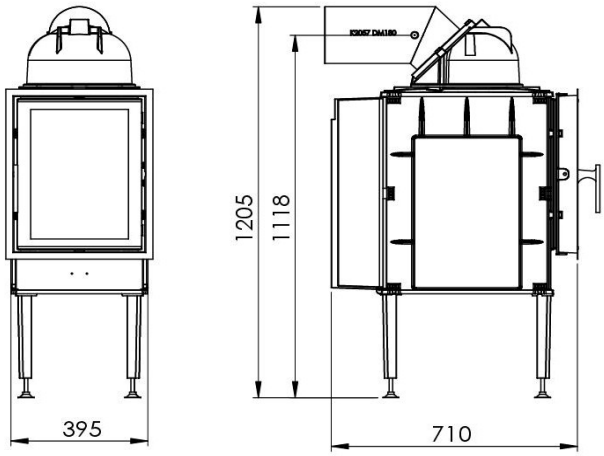

Eurotherm 8E/FP

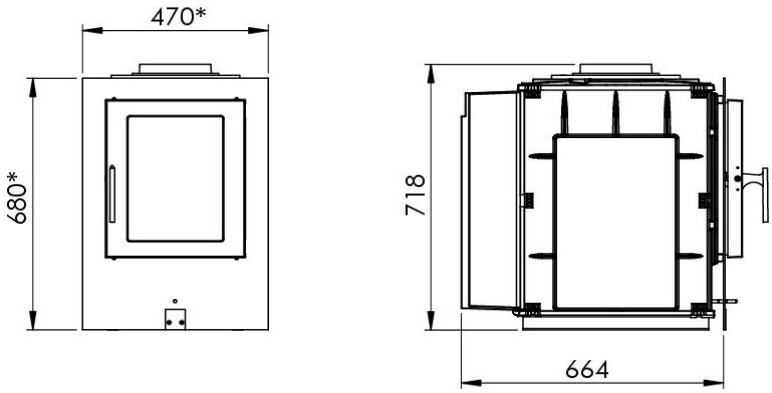

*) Other front panel sizes available

Eurotherm 10D/FP

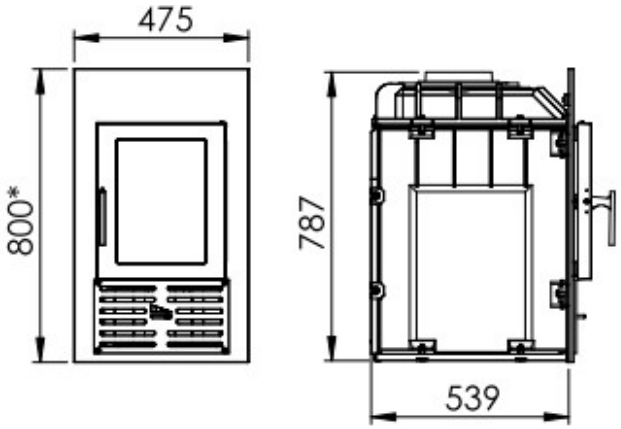

Eurotherm 8D/FP 500

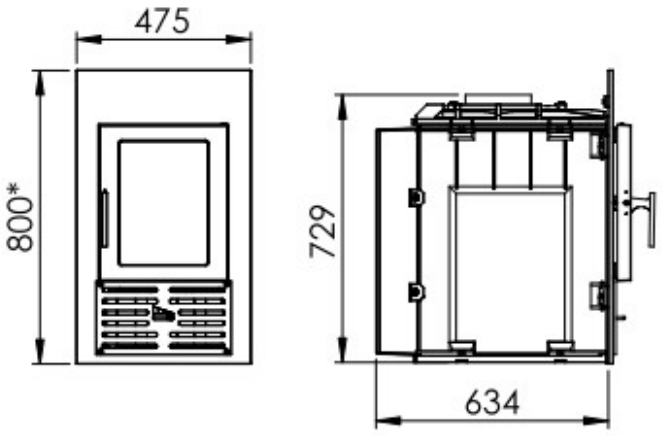

*) Front panel can be extended upwards

Eurotherm 10E/EV

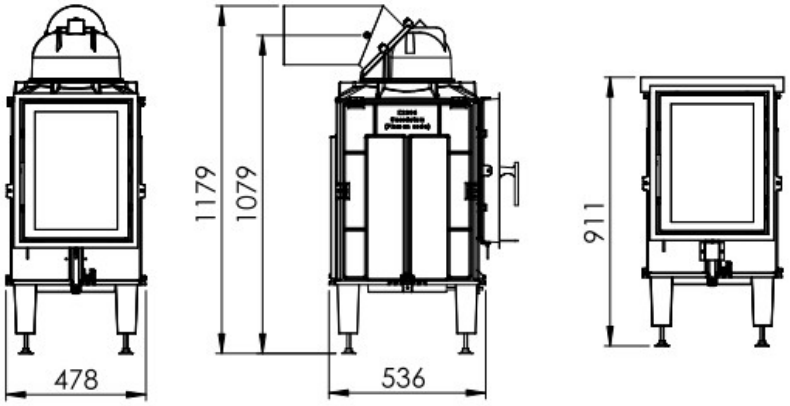

Eurotherm 10E/EV Tunnel

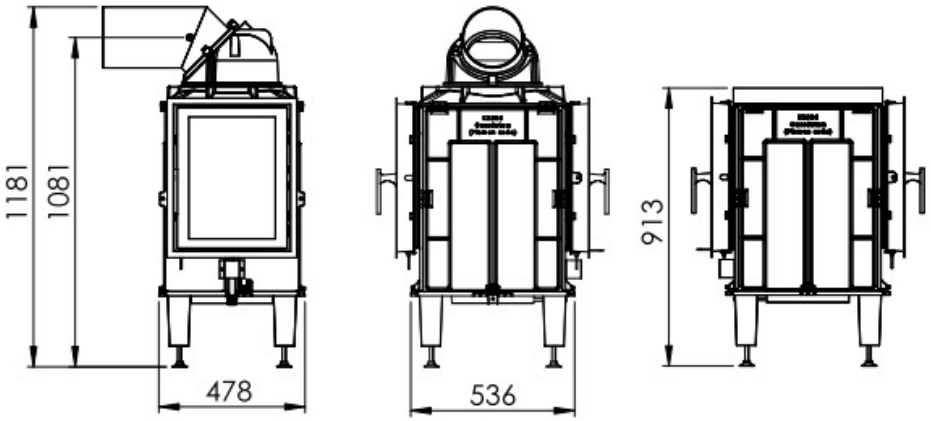

Eurotherm 10E/EV GET

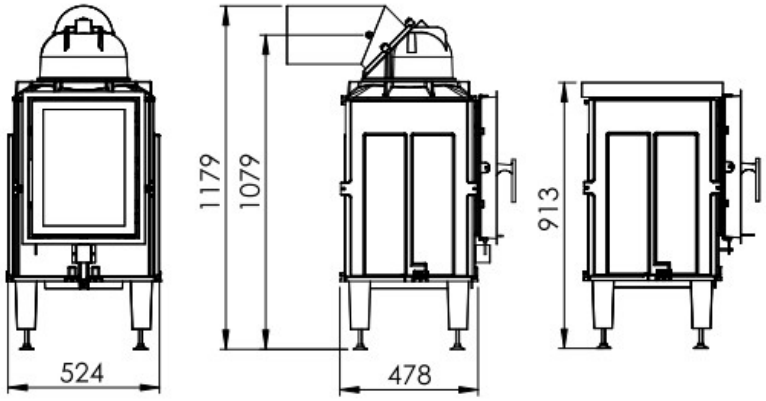

Eurotherm 10E/EV GET Tunnel

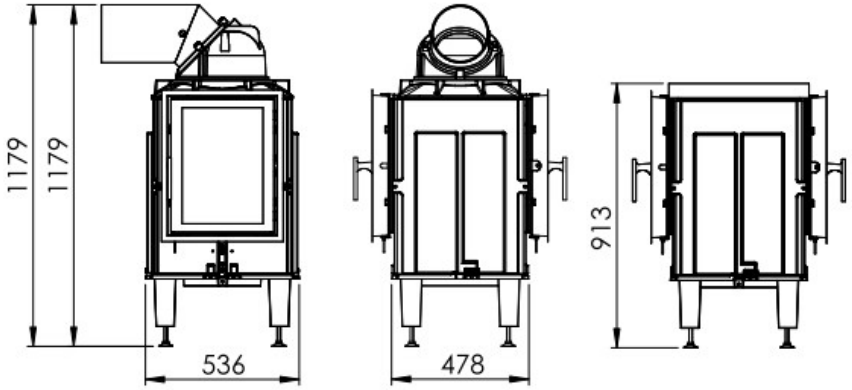

Eurotherm 10E/FP

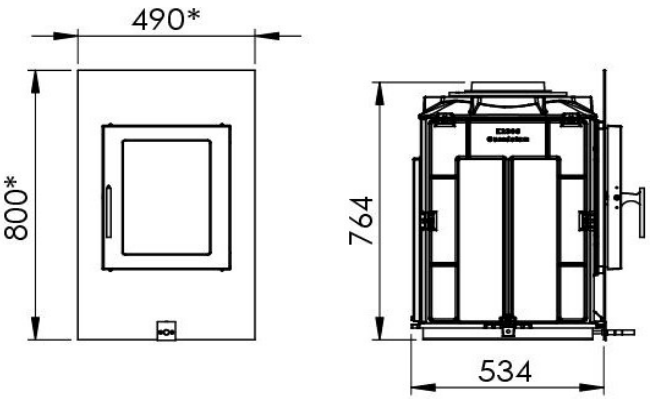

*) Other front panel sizes available

Eurotherm 12E/EV

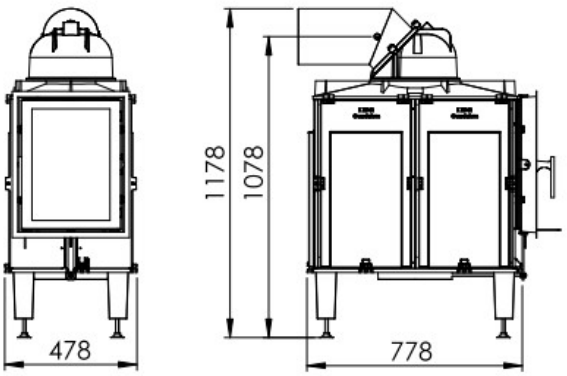

Eurotherm 12E/EV Tunnel

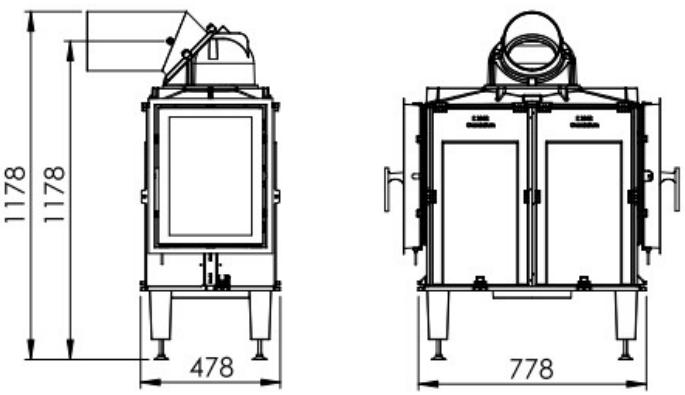

Eurotherm 12E/FP

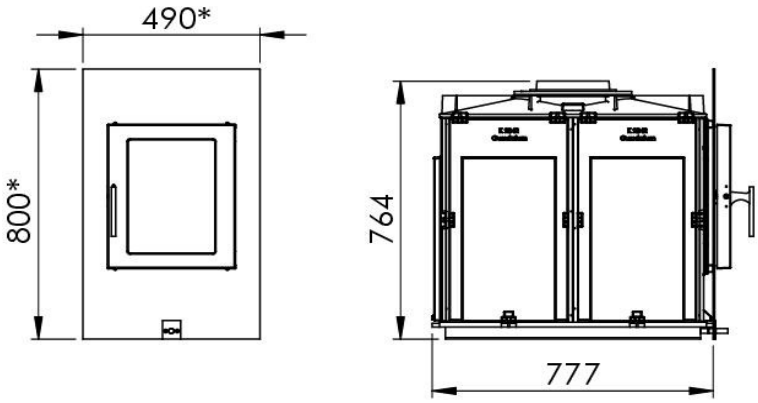

*) Other front panel sizes available

2. Installation

2.1. Planning

When planning, please take note of the technical specifications of the heating inserts and, when planning the tiled stove casing, ensure that access openings are positioned so that the
desired areas can be easily accessed (heating insert, cleaning access points, pipes, T-pieces, etc.)
If your heating insert is fitted with a combustion control system, please also ensure
to provide service access points for the temperature sensor and the motor. Furthermore,
the door contact switch should be easy to replace.
Load-bearing capacity of the substrate: This must be able to support the weight of the heating insert and the casing on the underlying exposed concrete floor.

If the combustion air for the heating insert is drawn from the room in which it is installed,
measures may need to be taken. The installation of

ventilation is possible if a so-called 'negative pressure monitor' is installed.
As a further additional measure, the 'Aurea' heating doors can be retrofitted with a self-closing mechanism or self-locking function can be retrofitted.

Simultaneous operation with other fireplaces: In principle, it is possible to operate the respective heating inserts with other fireplaces at the same time; however, the other fireplaces must only be operated in closed . It is also essential that the applicable local standards and
guidelines must be strictly adhered to, and the flue must be designed for this purpose.

Multiple-heater flue configuration: Our heating inserts are generally suitable for a multiple-heater in closed-flue operation. However, care must be taken to ensure that the national and
regional standards and guidelines are observed.

2.2. Installation preparations

Remove the packaging material from the heating insert, check that it is complete
and check the delivery for any transport damage.
Remove the dome from the heating insert by loosening the M8 external hexagon screws and the associated nuts (13 mm open-ended or ring spanner) to allow the firebricks to be removed from the heating insert. This reduction in weight makes the heating insert very easy to transport.

Now move the heating insert to the desired room and position.

2.3. Assembly

2.3.1. Fitting the adjustable feet (if fitted; not applicable to the FP version)

Tools:

Screw the supplied feet onto the underside of the heating insert at the designated positions.

Eurotherm 10–12: Eurotherm 4–6:

1x Open-ended/ring spanner: 13
1x Open-ended/ring spanner: 17

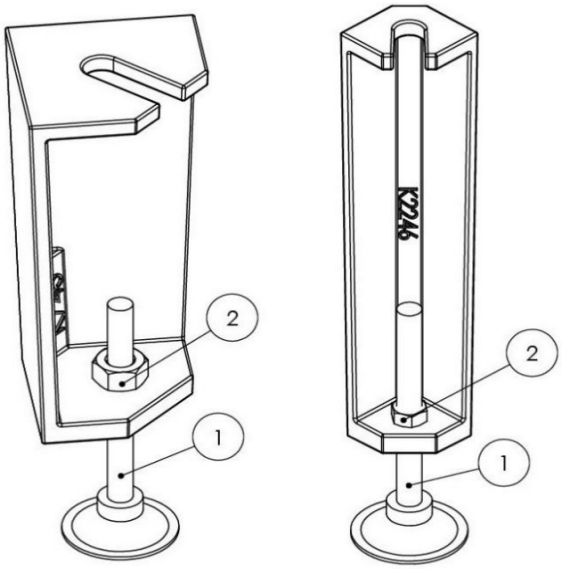

Then place the heating element in the intended position. Using the adjustable feet, the height can be further adjusted and the heating insert can be aligned straight with using a spirit level to position it correctly and straight position.

IMPORTANT: After adjustment, secure secure the adjustable foot with the lock nut!

1 Height-adjustable foot
2 Lock nut

Fitting the levelling feet (new version)



Make absolutely sure that, when screwing in the adjustable feet are not turned too far past this red mark . If this happens, the levelling foot will come into contact with the fireclay base plate and will damage it during operation. Claims arising from this cannot be accepted.

If the levelling feet are screwed in further, they must must beshortened!

2.3.2. Fitting the external air adapter (optional)

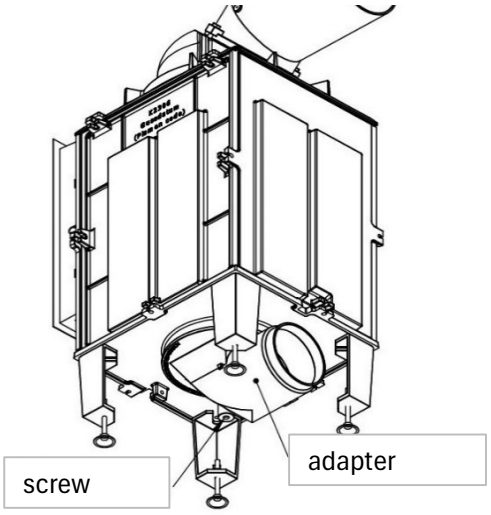

Tools: 1x 13 mm open-ended/ring spanner

If you are supplying your tiled stove with combustion air from outside , please use the external air adapter provided for this purpose adapter. This is available in horizontal and vertical versions.
The adapter can be rotated through 360°.

Installation: On the underside of the heating insert, on the base plate (in the centre of the ring).
Secure the adapter using the M8 screw provided.
A seal should be fitted to the external air adapter to a tight seal is guaranteed.

Connect the adapter to the aluminium flexible hose using the hose clamps supplied. Tighten these by hand as well.

2.3.3. Fitting the outlet spigot

The outlet you have ordered is included with the heater unit on the pallet.
You can simply fit this onto the dome and secure it with the screws supplied.

All outlets (hood/flue pipe connection, horizontal flat dome, etc.) can be rotated through 360°.

2.3.4. Fitting and removing the heating door

On the Eurotherm built-in versions, the heating door can be removed very easily by lower bolt and then gently pushing the door panel upwards out of its mounting.
Note the washer!

For the Eurotherm front-panel versions, please note the following:
Here, the bolt is additionally secured by a threaded pin to prevent it from loosening. This prevents the bolt from shifting upwards during operation.
Before removing the heater door, loosen this threaded pin with an Allen key.
Then remove the bolt by pulling it upwards.

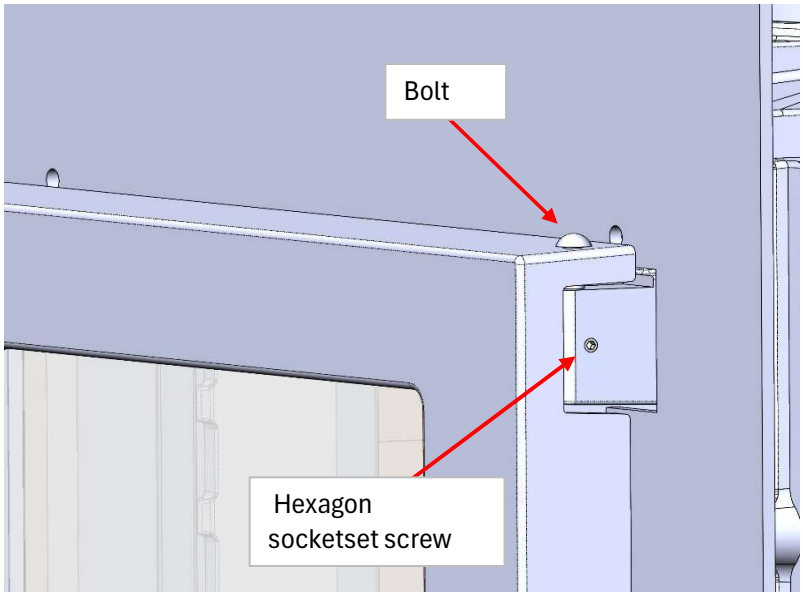

2.4. Installation

Now place the heating element in the designated position.
The heating insert can be installed in two ways:

2.4.1. Heater insert with metal after-heating surfaces (after-heating box)

In this case, the heating insert is placed on a standard support base or, using the feet supplied, on the floor using the feet supplied. In any case, it is essential to ensure a sufficient supply of combustion air, as otherwise overheating may occur.
The combustion chamber itself, and in particular the base of the combustion chamber, must be made of non-combustible materials. Ensure that no
combustible building materials are laid beneath the non-combustible floor covering, or that they are adequately protected. Furthermore, all connections between the heating insert, the reheating chamber and the flue must be completely airtight, so that neither draughts can enter nor flue gases escape. All openings in the flue openings – such as chimney doors – must be closed. Care must be taken to ensure that openings are provided in the plasterwork are provided so that the reheating boxes and the connecting piece can be cleaned

Please note:
If a fireplace installed in a living area draws its combustion air from the room in which it is installed , the system operator must ensure an adequate supply of fresh air. If necessary,
a separate combustion air supply from outside must be installed! Please therefore also follow the instructions provided by your stove fitter. In accordance with the TR-Warmluft guidelines, the design of the heating chamber must be carried out. The exact minimum distances from the heating chamber wall to the heating chamber wall must be observed. However, any insulation used must not have a surface made of a heat-reflective material.
A partition plate should be fitted between the heating insert and the after-heating unit, thereby increasing the thermal efficiency. The secondary heating element should be easily accessible
. If a hypocaust heating system is installed, adequate circulation within the
closed air system.

2.4.2. Heating insert with brick-built secondary flues (combination stove)

The heating insert is installed as described above. The connection from the heating insert to the brick flue system of the tiled stove is achieved by means of a cast-iron spout fitted onto the heating insert. This must be fitted in such a way that no cracks occur at the transition to the ceramic flue due to thermal expansion. The increased flow resistance (of the ceramic flue compared
the tested reheating chamber) must be taken into account when dimensioning the flue.

Please note:
Ensure that the substrate is level and free from any dirt. If the substrate
is not clean and level, there is a risk that the heating insert may wobble, which may
cause damage, particularly to the plaster or tiled cladding, during continued operation.

2.5. Fire safety regulations

Bernhard Kaschütz GmbH does not specify any regulations. Reference is made solely to ÖNORM B8311 .
In other countries, the clearances from combustible building components may differ.

2.5.1. Measures for combustible floor coverings

If there is a combustible floor covering in front of the tiled stove, a base plate must must be installed:

The underlay must be made of a non-non-combustible material and extend 10 cm to the right and left beyond the outer edge of the heating door.

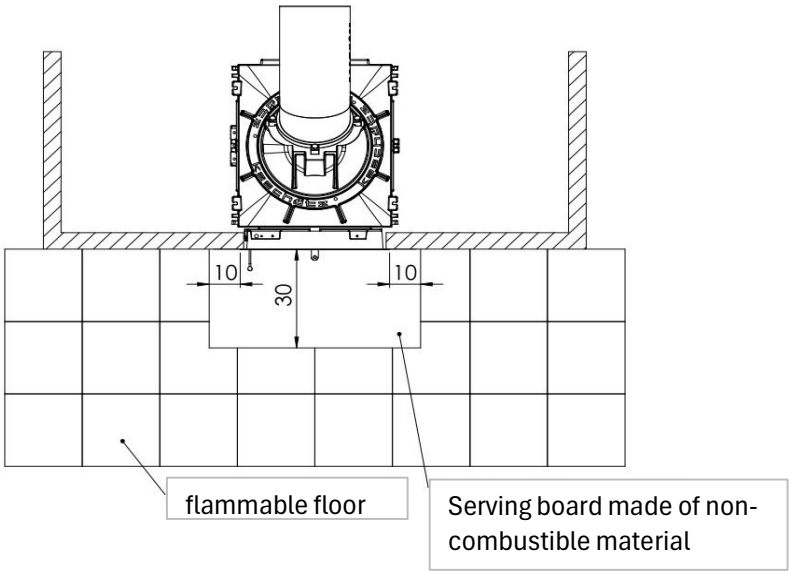

2.5.2. Clearances from combustible building components

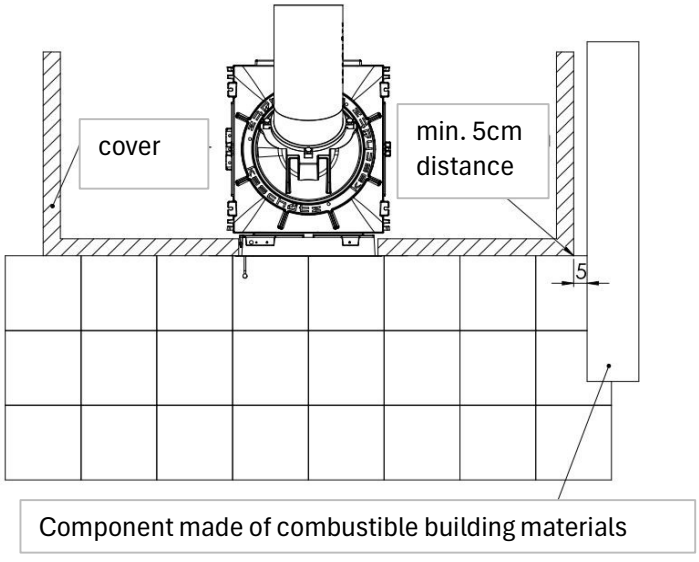

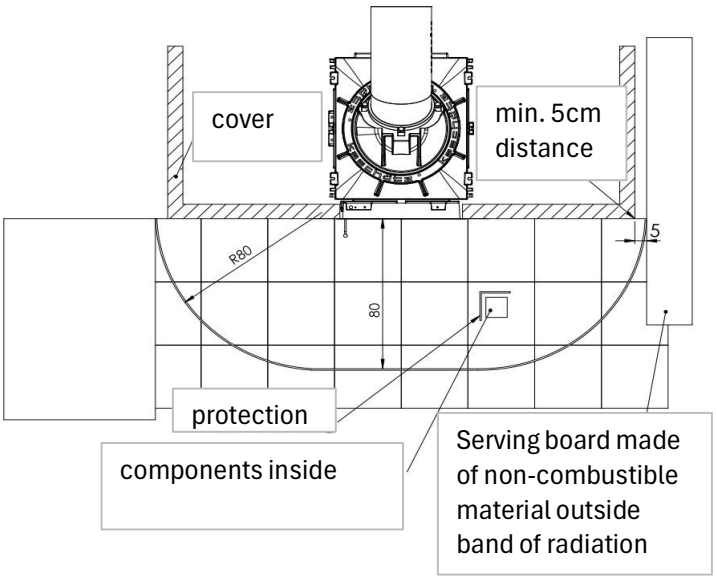

The distance between combustible components and the tiled stove casing must be at least 5 cm.

If there are any combustible furnishings or components within a radius of 80 cm (measured from the heating door), these must either be removed or shielded.

2.6. Fitting the fireclay bricks into the stove insert

Refit the heating insert with the fireclay bricks supplied.
Ensure that the combustion air openings face downwards so that no ash can enter the air duct between the fireclay and the cast-iron side wall:

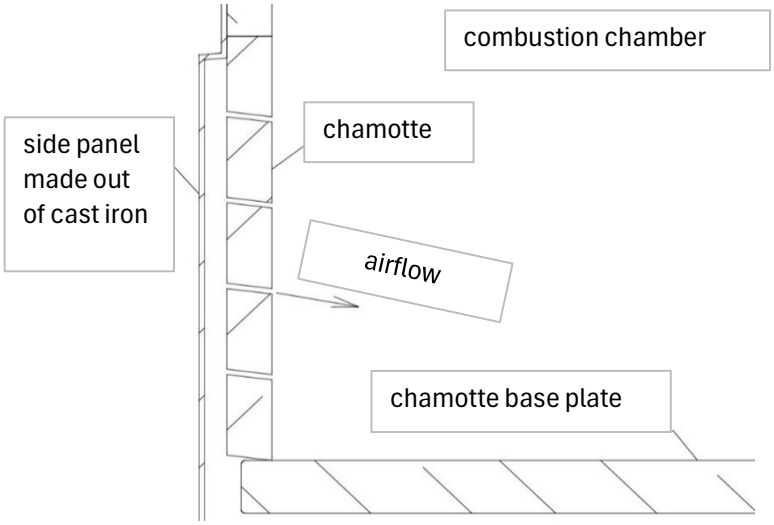

2.7. Sealing

Tools: 1 Cartridge press

Seal the groove in the dome (and the front panel on the Eurotherm 8-10D/FP) using the supplied iron putty (cartridge).
Now refit the dome onto the heating insert.

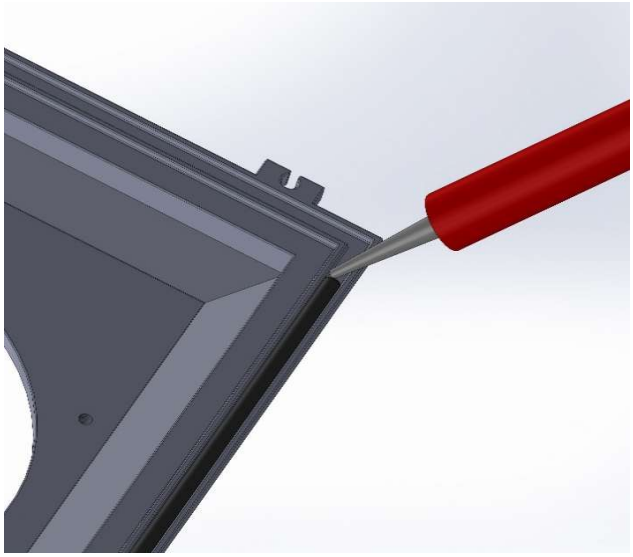

Tip: Use enough iron putty so that, when slightly oozes out of the joint when fitted. This ensures the groove is perfectly filled with iron putty. The excess putty can be removed with a damp brush and smoothed
.
Now screw the dome in place using the supplied external hexagon screws, washers and M8 nuts
. Tighten them hand-tight.

Place the supplied sealing cord (ø12mm) into the groove in the dome and place the cover onto the dome (if fitted). Ensure that the cover is centred. Secure the cover using the supplied retaining brackets and the M10 external hexagon bolts, and tighten these by hand as well.

GO firebox: inserts with a fireclay surround frame, the GO fireboxes, do no cast-iron dome. In this case, seal the groove at the bottom of the support frame as described above or use the flat gasket that has already been fitted at the factory.

2.8. Accessories

2.8.1. Combustion control – Euromatic

Follow the manufacturer's own installation instructions!

2.8.2. Storage unit top section – PILO

Follow the manufacturer's installation instructions!

3. Repair instructions

3.1. Replacing the fireclay lining – Eurotherm "E-Series"

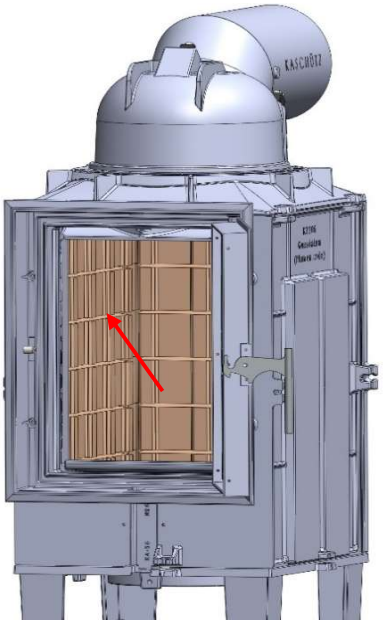

First, on the side fireclay wall, push the
second brick from the top as far forwards as possible. To
to do this, you need to
slightly upwards.

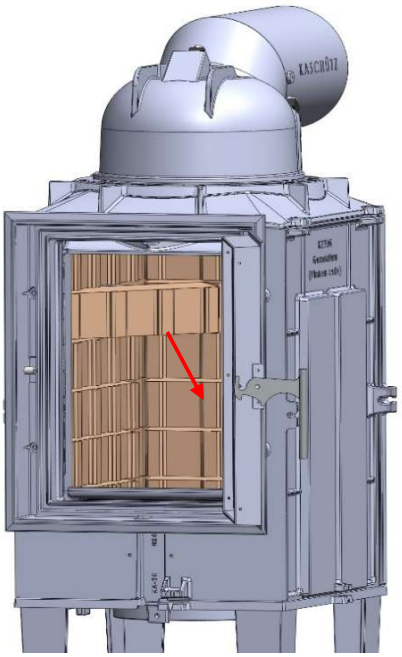

The brick can then be turned outwards slightly.
Start by pushing the brick back slightly
and it can be removed.
Once the first stone has been removed, all the
removed.

On the Eurotherm 12, there is an additional
cast-steel fireclay strip. First remove the fireclay bricks in the area near the heating door
rows. Then fold the strip down towards you, with the top end facing you.
You can now remove the rear row of firebricks. Finally, you can lift out the base plate
(Caution: this is very heavy!)

Reassembly is carried out in reverse order!

3.2. Replacing the firebrick lining – Eurotherm "D/FP Series"

To replace the firebricks, loosen
the two screws on the metal strips on the left and right
heating door.
The strip can then be easily removed and
the fireclay bricks can be replaced.

Please note that the fireclay bricks must only
placed in the firebox when dry, and
must not be set in mortar!

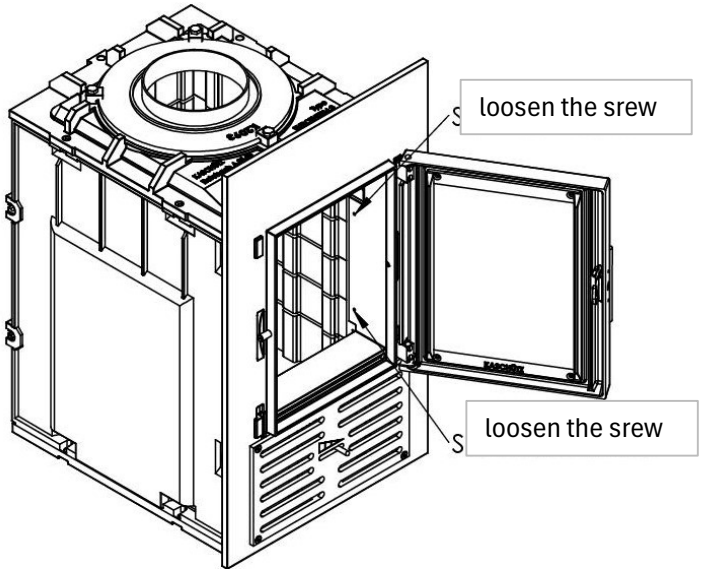

3.3. Replacing glass panes or sealing cords

Please contact Bernhard Kaschütz GmbH before carrying out any repairs so that the procedure for replacing the glass can be clarified.
Glass panes secured with screws (Elegance, Aurea inner pane) can be replaced on site.
Glass panes bonded in place (Aurea external glass) must be sent to Bernhard Kaschütz GmbH for repair.
If possible, remove the door leaf from its hinges and place it on a flat surface.
If necessary, also check the door seals.

4. Initial commissioning

The initial commissioning of the tiled stove system should be carried out by a qualified stove fitter in accordance with the operating (supplied with the heating insert). Measurements should be taken at the easily accessible measuring and testing points as specified in the regulations, if these are provided for. Finally, the end user confirms in an acceptance and handover report that they have accepted of the operating instructions and the training provided by the master stove fitter. For the warranty and product liability, we recommend that the master stove fitter has the handover of the tiled stove system and draws the customer's attention to all important details of the tiled stove, or when heating.

5. Concluding Remarks

Version of the instructi Freitag, 24. Juli 2026
Bernhard Kaschütz GmbH reserves the right to make changes at any time.

6. Spare parts

For enquiries regarding spare parts, please always contact the tiled stove fitter or the manufacturer. Only original spare parts can guarantee the stove's long service life.

6.1. Viewing panes

Designation	Outer pane		Inner pane	
	Designation	Dimensions (mm)	Designation	Dimensions (mm)
ET 6E-10E-12E / FP	ROBAX 54	356x260x5	ROBAX 54	356x260x5
ET 8D (500)-10D / FP	ROBAX 54	356x260x5	ROBAX 54	356x260x5
Aurea 42	ROBAX 49	462x360x4	ROBAX 48	428x312x5
Elegance 42	ROBAX 48	428x312x5	ROBAX 48	428x312x5
Trend Radius 45	ROBAX 23	401x441x4 R450	ROBAX 26	435x373x4

6.2. Fireclay diagrams

Eurotherm 4E/EV

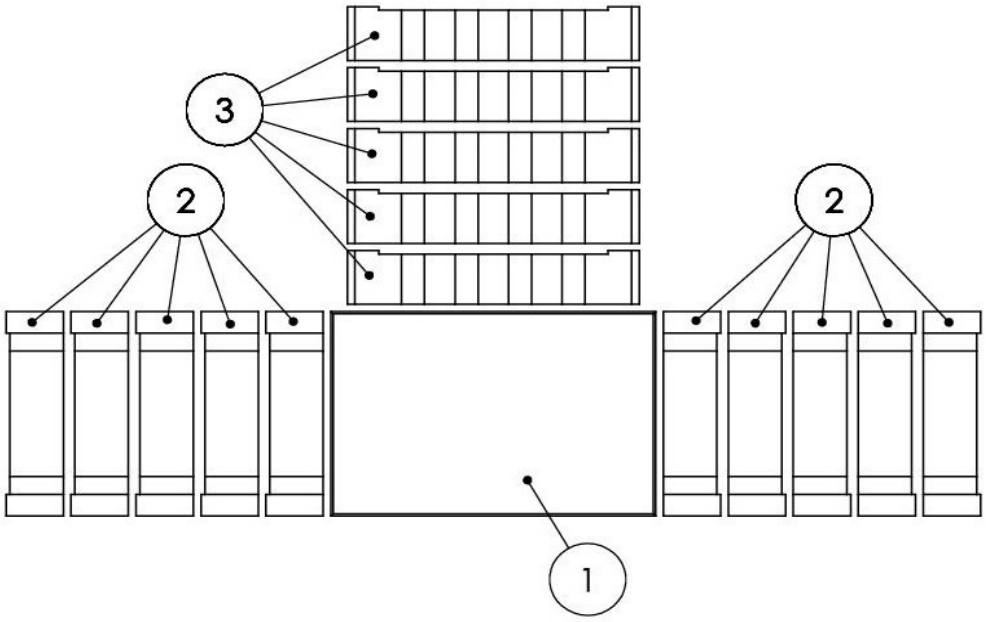

POS No.	COMPONENT	QUANTITY
1	Base plate	1
2	Side panel	10
3	Rear wall block (not applicable for tunnel version	5

Eurotherm 6E/EV+FP

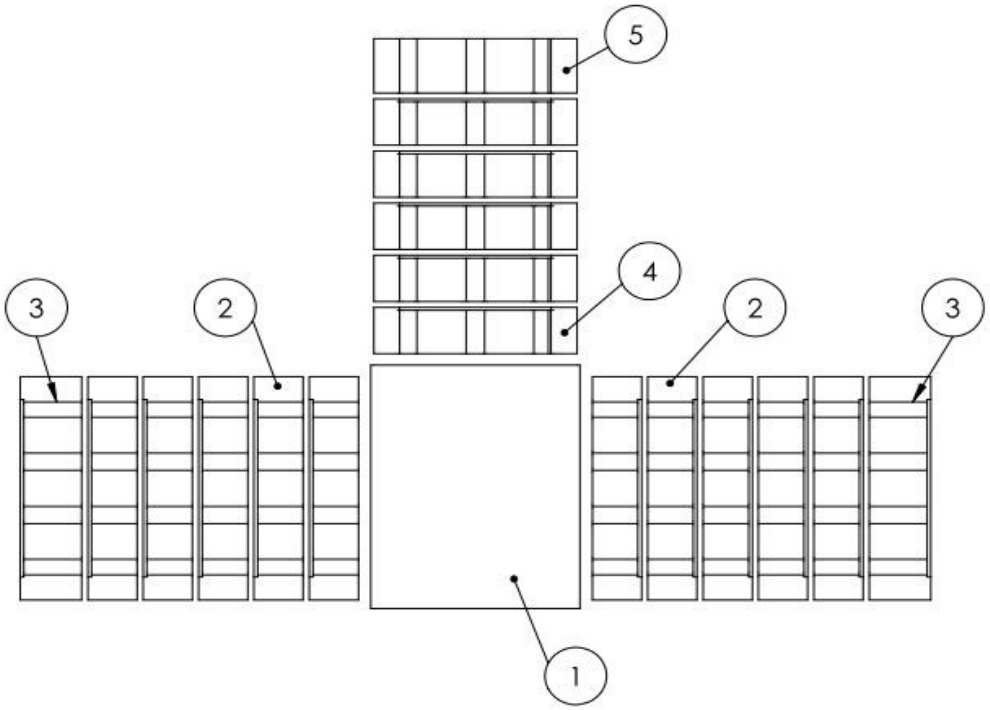

Eurotherm 6E Tunnel

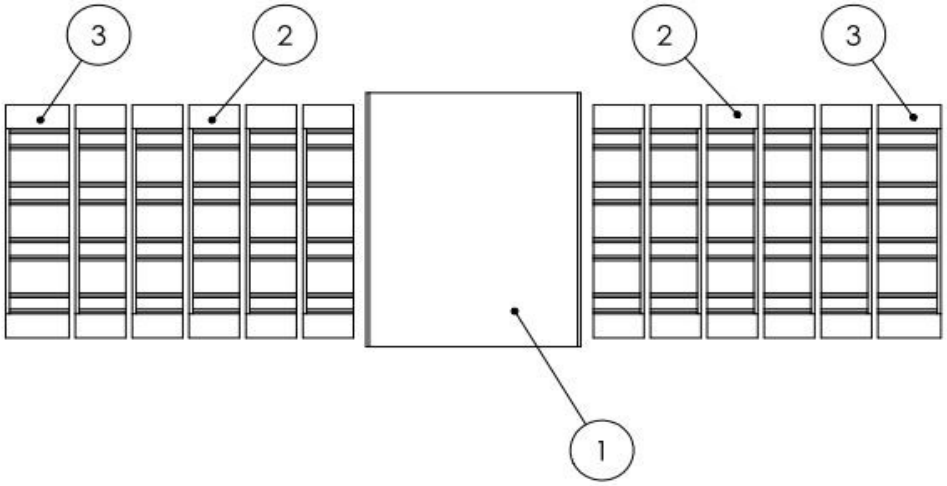

POS No.	COMPONENT	QUANTITY
1	Base plate	1
2	Side panel	10
3	Side wall panel, top section raised	2
4	Rear wall panel (not applicable for tunnel version	5
5	p rear wall panel (not applicable for tunnel versi	1

Eurotherm 6E GET

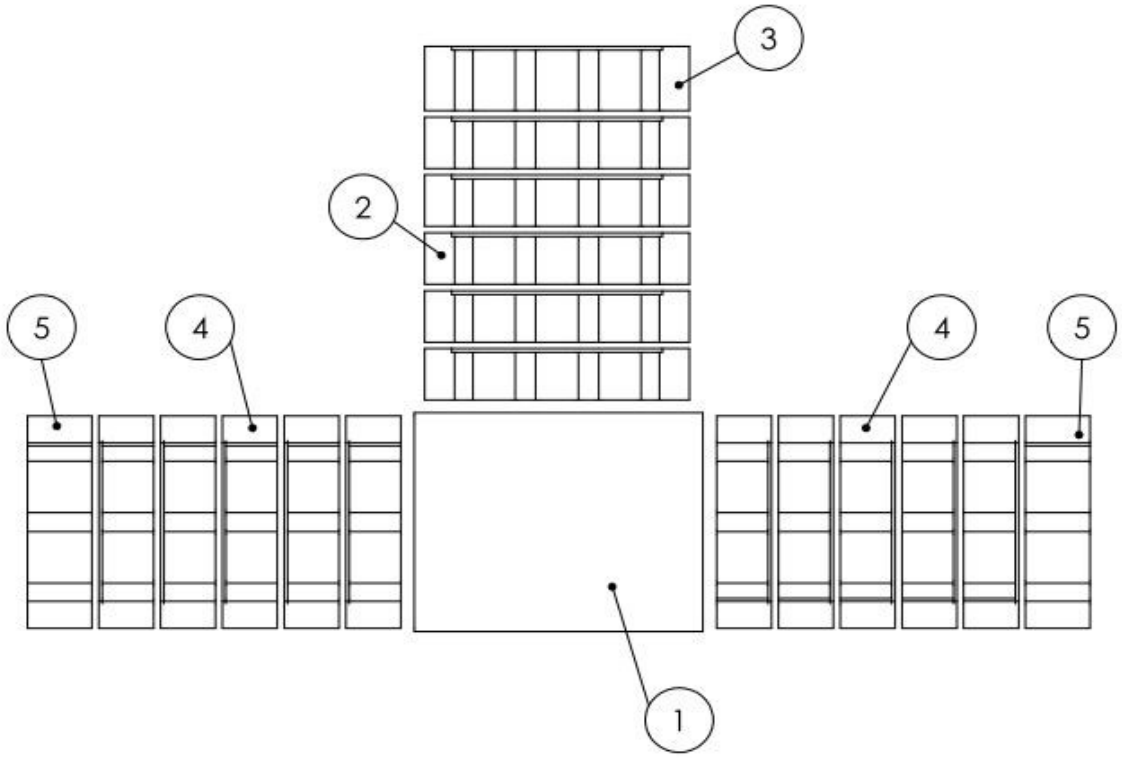

Eurotherm 6E GET Tunnel

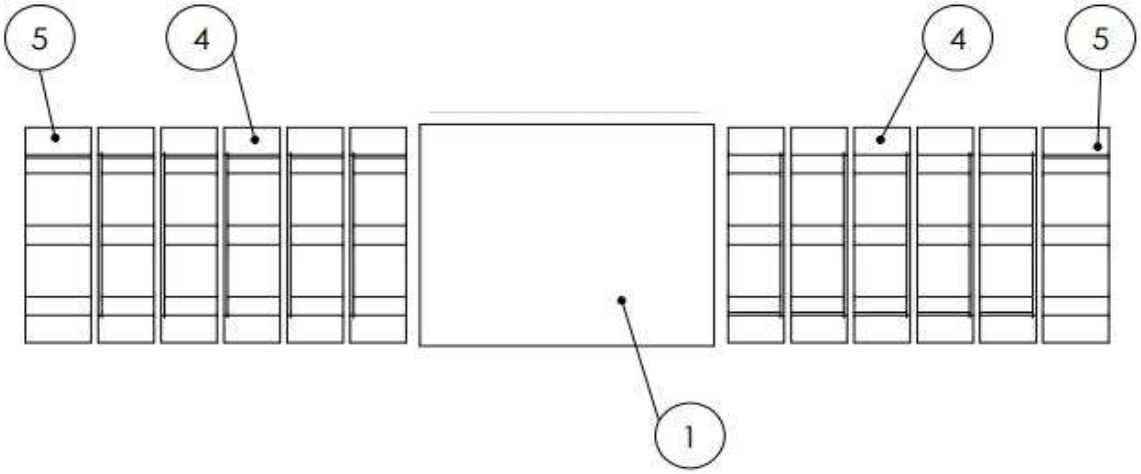

POS No.	COMPONENT	QUANTITY
1	Base plate	1
2	Rear wall panel (not applicable for tunnel version	5
3	Rear wall block, top (not applicable for tunnels)	1
4	Side panel	10
5	Side wall panel, top section raised	2

Eurotherm 8D/FP + 10D/FP

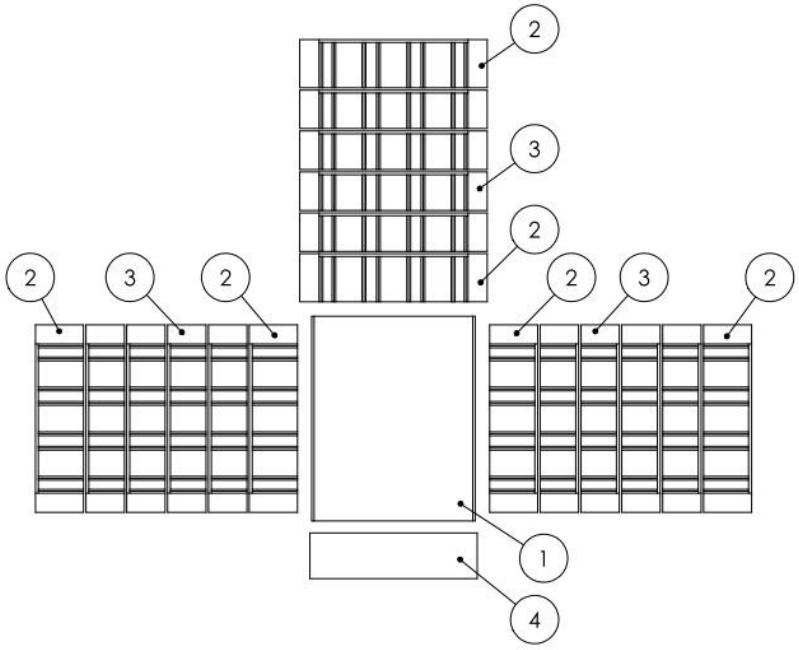

POS No.	COMPONENT	QUANTITY
1	Base plate	1
2	Side/rear wall block, high at the top and bottom	6
3	Side/rear wall block	12
4	Front wall block	1

Eurotherm 8D/FP 500

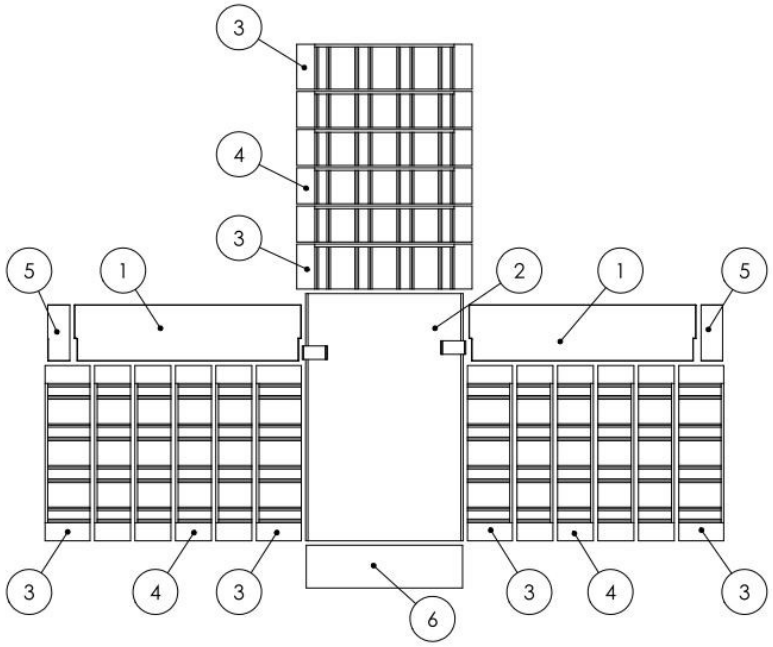

POS No.	COMPONENT	QUANTITY
1	Rear side panel (right + left)	2
2	Base plate	1
3	Side/rear wall block, high (top and bottom)	6
4	Side/rear wall block	12
5	Small side blocks, top (L + R)	2
6	Front wall block	1

Eurotherm 8E/FP+EV

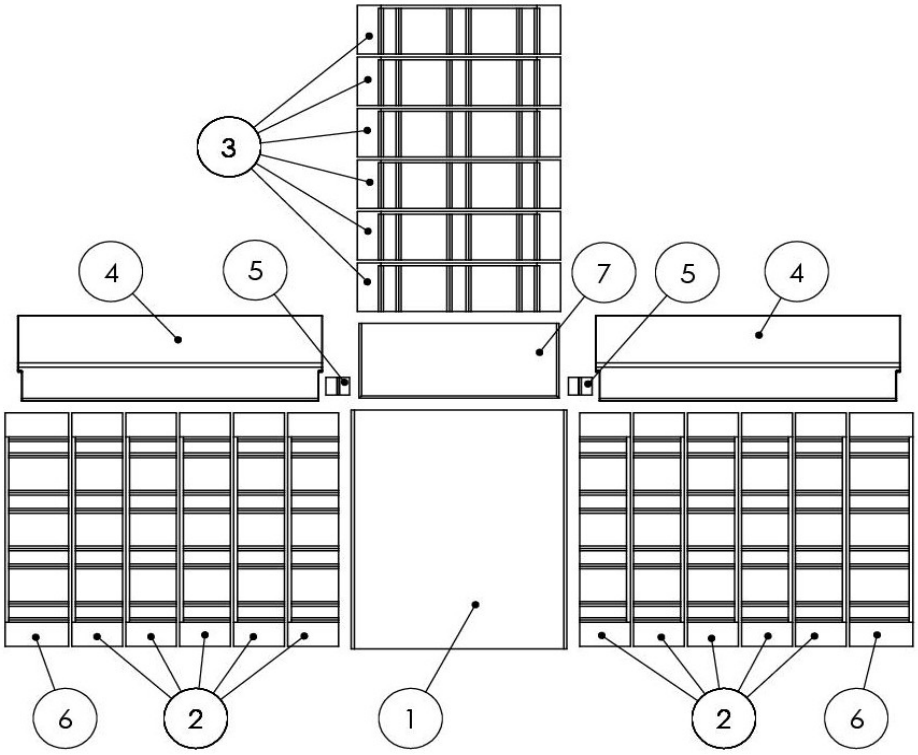

POS No.	COMPONENT	QUANTITY
1	Large base plate	1
2	Low side wall panel	10
3	Rear panel	6
4	Rear side panel (left + right)	2
5	Support bracket	2
6	Tall side panel	2
7	Small base plate	1

Eurotherm 10E/EV+FP

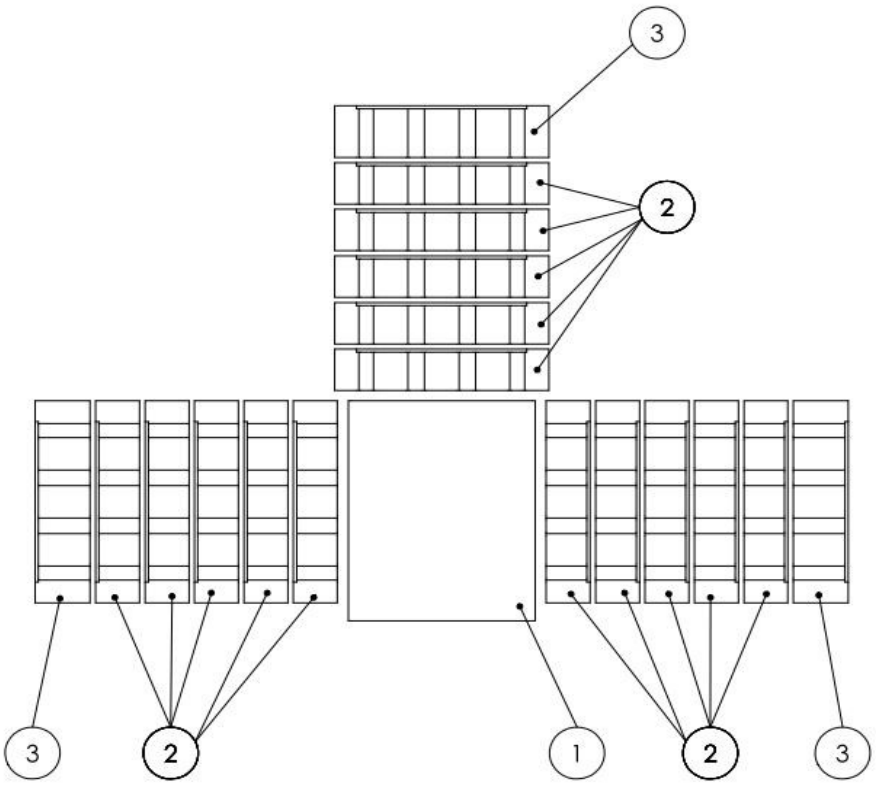

Eurotherm 10E Tunnel

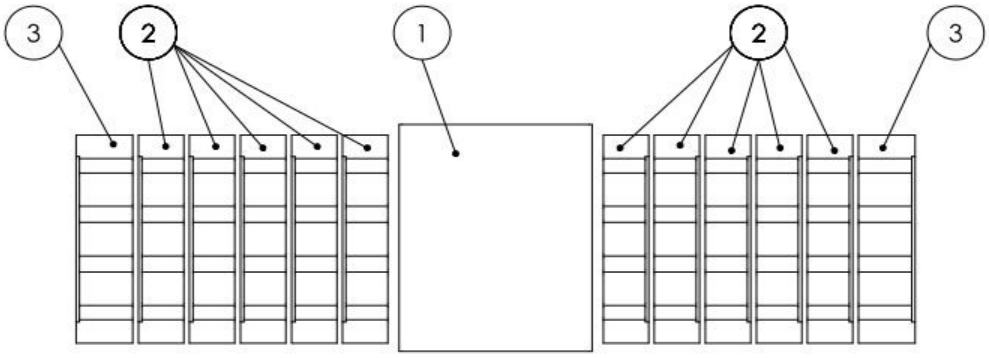

POS No.	COMPONENT	QUANTITY
1	Base plate	1
2	Side panel	10
3	Tall side panel	2
4	Rear wall panel (not applicable for tunnel version	5
5	Rear wall block, top (not applicable for tunnels)	1

Eurotherm 10E GET

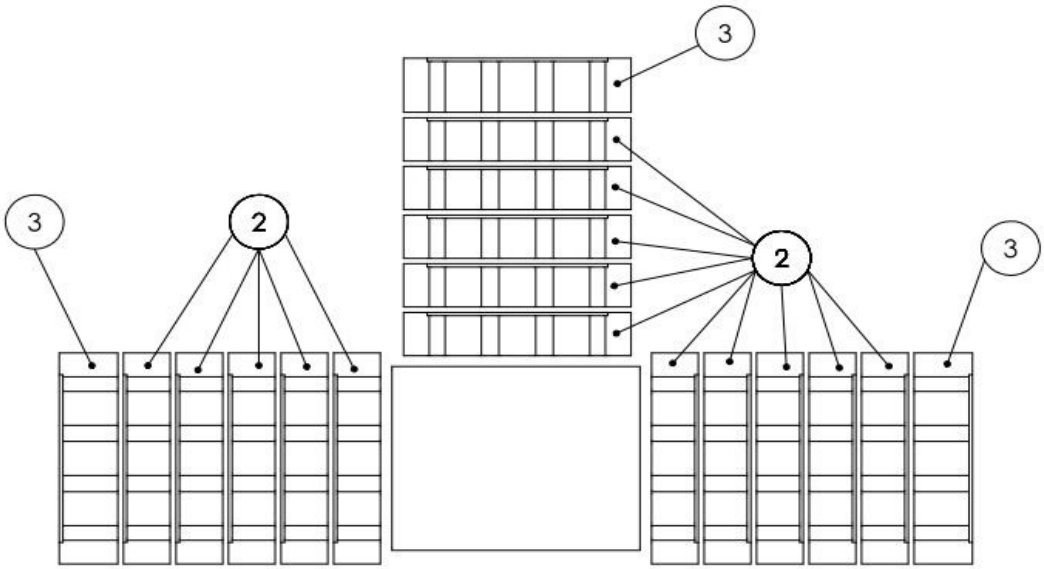

Eurotherm 10E GET Tunnel

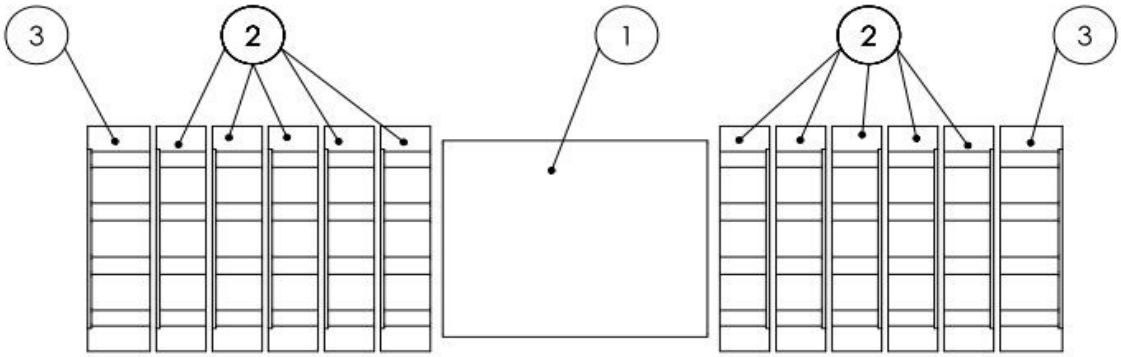

POS No.	COMPONENT	QUANTITY
1	Base plate	1
2	Side panel	10
3	Tall side panel	2
4	Rear wall panel (not applicable for tunnel version	5
5	Rear wall block, top (not applicable for tunnels)	1

Eurotherm 12E/EV + FP

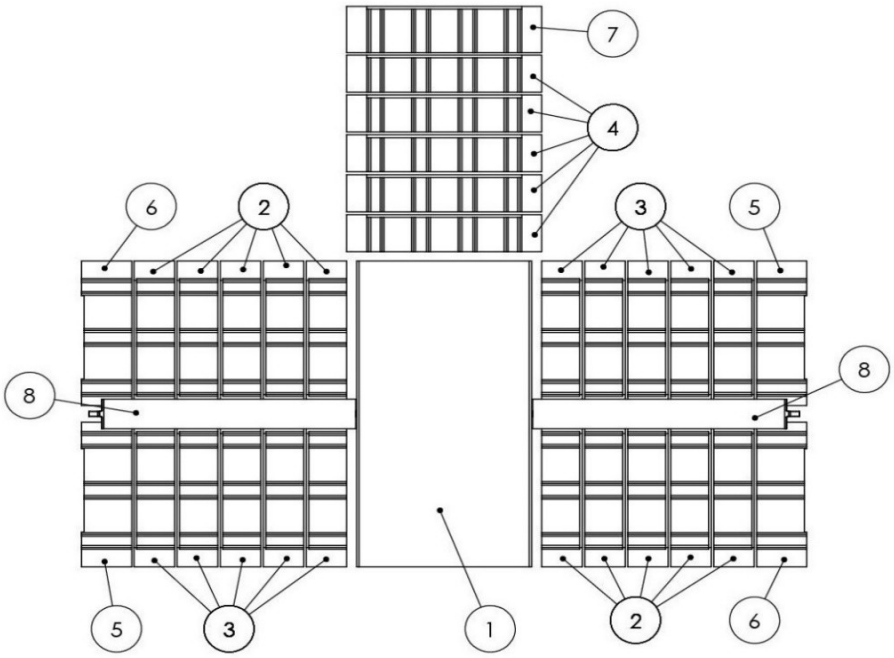

POS No.	COMPONENT	QUANTITY
1	Base plate	1
2	Side block, low RE-VO, LI-HI	10
3	Side block, low, LI-VO, RE-HI	10
4	Low rear wall block	5
5	High side block LI-VO, RE-HI	2
6	High side block RE-VO, LI-HI	2
7	High rear wall brick	1
8	Fireclay strip	2

Eurotherm 12E Tunnel

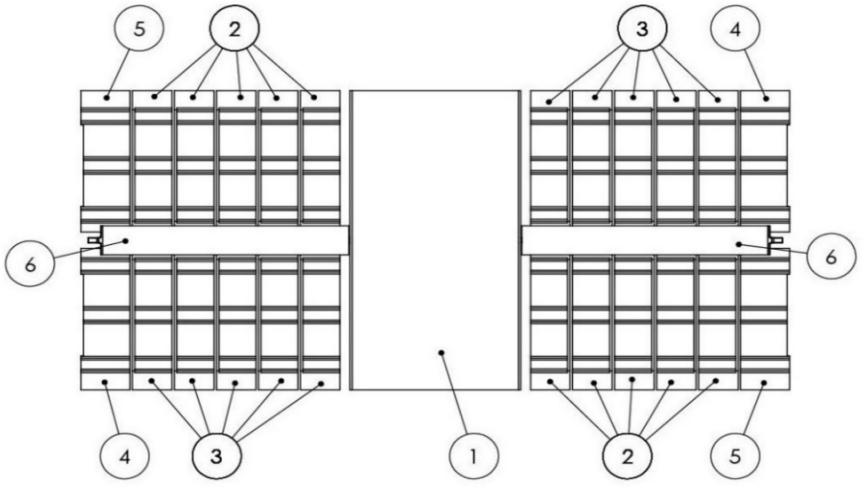

POS No.	COMPONENT	QUANTITY
1	Base plate	1
2	Side block, low RE-VO, LI-HI	10
3	Side block, low, LI-VO, RE-HI	10
4	High side block LI-VO, RE-HI	2
5	High side block RE-VO, LI-HI	2
6	Fireclay strip	2