

Available configurations

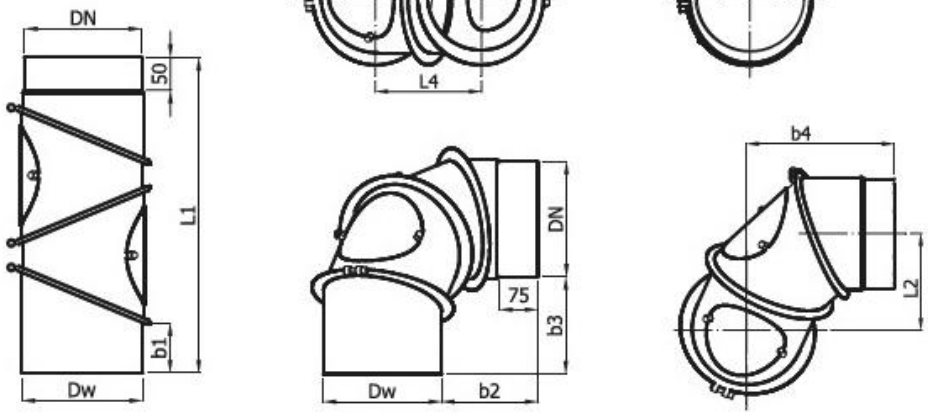

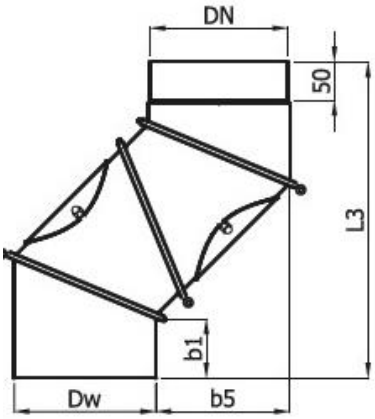

KNSR x/UNI-CZ 2-4seg

- 4 segments
- sheet thickness
- material
- universal
- nominal diameter DN
- adjustable elbow with revisions

Diameter DN	ø120	ø130	ø150	ø160	ø180	ø200	ø220	ø250
Dw [mm]	121.0	131.0	151.0	161.0	181.0	201.0	221.0	251.0
b1 [mm]	84.0	86.0	85.0	85.0	82.0	73.0	83.0	83.0
b2 [mm]	205.0	190.0	180.0	160.0	160.0	145.0	220.0	200.0
b3 [mm]	205.0	190.0	180.0	160.0	160.0	145.0	220.0	200.0
b4 [mm]	265.0	285.0	275.0	280.0	290.0	300.0	335.0	330.0
b5 [mm]	225.0	220.0	200.0	200.0	200.0	200.0	280.0	260.0
L1 [mm]	535.0	535.0	525.0	500.0	515.0	505.0	650.0	640.0
L2 [mm]	200.0	200.0	190.0	160.0	180.0	200.0	240.0	230.0
L3 [mm]	440.0	440.0	440.0	415.0	430.0	420.0	540.0	535.0
L4 [mm]	225.0	220.0	200.0	200.0	200.0	200.0	280.0	260.0
Weight [kg]	3.90	4.30	4.80	5.20	5.70	6.30	8.80	9.60

Destination	D	D - smoke ducts
Material	CZ	CZ - mild steel DC01
Sheet thickness s	2	2 - sheet thickness 2.0 mm